CATALOGUE 21

by KATHREIN SIRA RADIO SYSTEMS

FM FILTERS AND COMBINERS

ANYWHERE THE SOLUTION

Company History

SIRA S.r.l. was founded in 1977 and has more than 40 years of proud history in broadcasting and telecommunications RF equipment. Headquartered in Caponago, Italy, the company had developed into a leading manufacturer of broadcast equipment with installations in more than 120 countries. Throughout the years, the SIRA brand has become known for flexibility in engineering solutions, fast delivery and good quality at an attractive price. Since 1992 the company has belonged to the Kathrein group but operated independently under the SIRA name. Only in 2015 we started to integrate SIRA operations with the Kathrein Broadcast activities. Since 2016 customers are able to buy both brands out of one hand. In 2019 the Broadcast business worldwide was carved out into the Kathrein Broadcast group. The Italian branch of Kathrein Broadcast is now named "SIRA Radio Systems S.r.l." to pick up on the proud heritage of the SIRA brand.

Continuity and proven quality

Our SIRA engineering team is based near Milan, Italy. Since 2018, we have optimized our supply chain with our own centralized manufacturing that is subject to the notoriously rigorous Kathrein quality management system.

With this approach we have been able to maintain the values and virtues SIRA has stood for in the Broadcast market for more than 40 years: The creativity of our solutions combined with attractive economics, reliability and fast delivery.

Unique designs

SIRA includes a full portfolio of UHF, VHF and FM antennas as well as combiners, all designed in Italy. The product line includes unique custom designs as well as proven standard designs, so the product line offers an attractively priced alternative to customers who are looking for more choices, as well as customized project specific solutions. The SIRA portfolio is therefore complimentary to the traditional Kathrein Broadcast offering.

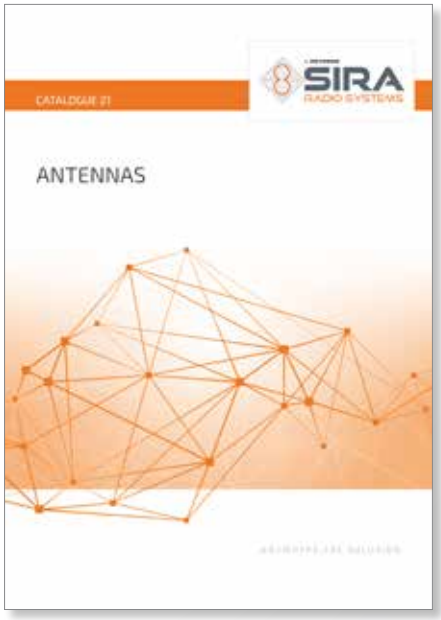

Please feel free to order our catalogues under the following contact.

Contact

For any question, your familiar contacts in Italy are now supporting you out of
SIRA Radio Systems S.r.l.

Mail: info@siraradiosystems.com

Specifications are subject to change without prior notice

Specifications are subject to change without prior notice

INDEX

FM Filters	8
FM Combiners	34

FM FILTERS

INDEX

CFM2-0.2	9
CFM3-0.2	10
CFM2-0.6	11
CFM3-0.6	12
CFM4-0.6	13
CFM2-1.2	14
CFM3-1.2	15
CFM4-1.2	16
CFM6ELL-1.2	17
CFM2-2	18
CFM3-2	19
CFM4-2	20
CFM2-3	21
CFM3-3	22
CFM4-3	23
CFM2-5	24
CFM3-5	25
CFM4-5	26
CFM2-10	27
CFM3-10	28
CFM4-10	29
CFM4ELL-10	30
CFM2-20	31
CFM3-20	32
CFM4-20	33

CODING GUIDE

FM bandpass filter (i.e.): CFM4-10
C = cavità (cavity)
FM = FM band
4 = four pole
10 = power handling capability 10 kW

Specifications are subject to change without prior notice

CFM2-0.2

FM BANDPASS FILTER

FEATURES

- FM 0.2 kW bandpass filter
- 2 pole / 85 mm (3.3 in)
- adjustable selectivity
- available rack mounting solution

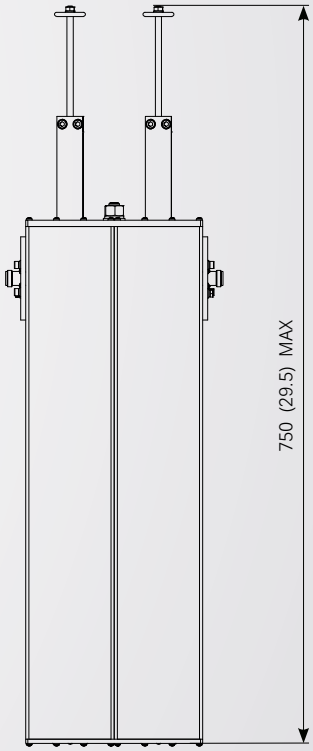

ELECTRICAL DATA

TYPE	CFM2-0.2/AA
FREQUENCY RANGE	87.5 ÷ 108 MHz
IMPEDANCE	50 ohm
RETURN LOSS	≥26 dB at carrier fo
SELECTIVITY stop band atten. 20 dB	± 1.6 ÷ ± 2.0 MHz
MAX INPUT POWER	0.2 kW (selectivity ± 1.6 ÷ ± 2.0 MHz)
INSERTION LOSS	See table below
CONNECTORS	NF
OPERATING TEMPERATURE RANGE	-10 to + 45°C (+14 to +113°F)
OVER TEMPERATURE*	typical 30 K at max input power
MATERIALS	Brass, aluminium, invar, teflon
EXTERNAL FINISHING	Painted RAL 9005
WEIGHT (approx)	5 kg (11 lb)

* referred to ambient temperature. Recommended: [AmbientTemp. + OverTemp.] ≤70°C (158°F)

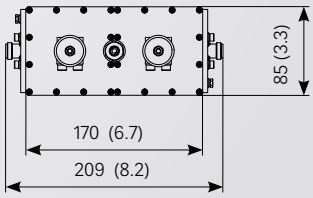

All dimensions are in millimeters (inches)

INSERTION LOSS at carrier fo (dB)

FREQUENCY (MHz)		87.5	98	108
SELECTIVITY (MHz)	± 2.0	0.68	0.69	0.70
	± 1.6	0.81	0.82	0.83

CFM3-0.2

FM BANDPASS FILTER

FEATURES

- FM 0.2 kW bandpass filter
- 3 pole / 85 mm (3.3 in)
- adjustable selectivity
- available rack mounting solution

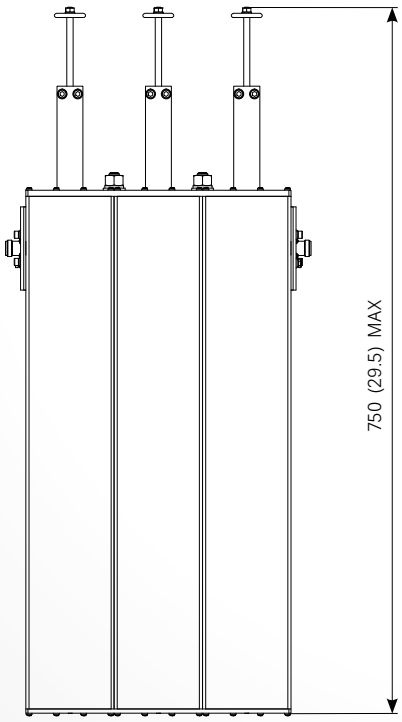

ELECTRICAL DATA

TYPE	CFM3-0.2/AA
FREQUENCY RANGE	87.5 ÷ 108 MHz
IMPEDANCE	50 ohm
RETURN LOSS	≥26 dB at carrier fo
SELECTIVITY stop band atten. 20 dB	± 0.8 ÷ ± 1.4 MHz
MAX INPUT POWER	0.2 kW (selectivity ± 0.8 ÷ ± 1.4 MHz)
INSERTION LOSS	See table below
CONNECTORS	NF
OPERATING TEMPERATURE RANGE	-10 to + 45°C (+14 to +113°F)
OVER TEMPERATURE*	typical 30 K at max input power
MATERIALS	Brass, aluminium, invar, teflon
EXTERNAL FINISHING	Painted RAL 9005
WEIGHT (approx)	7 kg (15 lb)

* referred to ambient temperature. Recommended: [AmbientTemp. + OverTemp.] ≤70°C (158°F)

INSERTION LOSS at carrier fo (dB)

FREQUENCY (MHz)		87.5	98	108
SELECTIVITY (MHz)	± 1.4	0.91	0.93	0.95
	± 1.2	1.04	1.06	1.08
	± 0.8	1.44	1.47	1.50

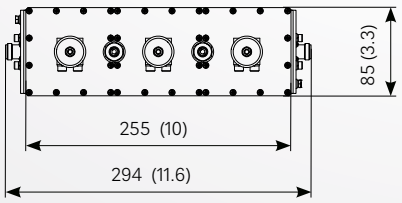

All dimensions are in millimeters (inches)

Specifications are subject to change without prior notice

CFM2-0.6

FM BANDPASS FILTER

FEATURES

- FM 0.6 kW bandpass filter
- 2 pole / 150 mm (5.9 in)
- adjustable selectivity

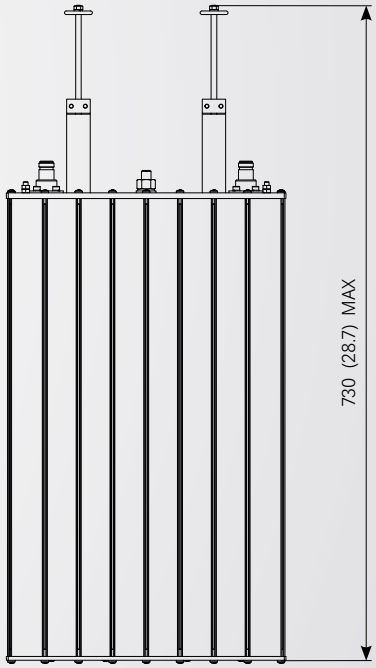

ELECTRICAL DATA

TYPE	CFM2-0.6/AA	CFM2-0.6/BB
FREQUENCY RANGE	87.5 ÷ 108 MHz	
IMPEDANCE	50 ohm	
RETURN LOSS	≥26 dB at carrier fo	
SELECTIVITY stop band atten. 20 dB	± 1.6 ÷ ± 2.0 MHz	
MAX INPUT POWER	0.6 kW (selectivity ± 1.6 ÷ ± 2.0 MHz)	
INSERTION LOSS	See table below	
CONNECTORS	NF	7/16 F
OPERATING TEMPERATURE RANGE	-10 to + 45°C (+14 to +113°F)	
OVER TEMPERATURE*	typical 30 K at max input power	
MATERIALS	Brass, aluminium, invar, teflon	
EXTERNAL FINISHING	Painted RAL 9005	
WEIGHT (approx)	12 kg (26 lb)	

* referred to ambient temperature. Recommended: [AmbientTemp. + OverTemp.] ≤70°C (158°F)

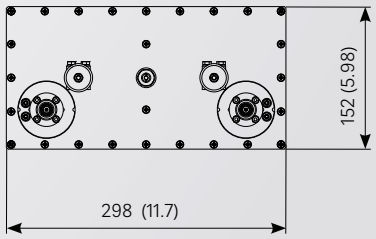

All dimensions are in millimeters (inches)

INSERTION LOSS at carrier fo (dB)

FREQUENCY (MHz)		87.5	98	108
SELECTIVITY (MHz)	± 2.0	0.44	0.46	0.48
	± 1.6	0.52	0.55	0.58

CFM3-0.6

FM BANDPASS FILTER

FEATURES

- FM 0.6 kW bandpass filter
- 3 pole / 150 mm (5.9 in)
- adjustable selectivity

ELECTRICAL DATA

TYPE	CFM3-0.6/AA	CFM3-0.6/BB
FREQUENCY RANGE	87.5 ÷ 108 MHz	
IMPEDANCE	50 ohm	
RETURN LOSS	≥26 dB at carrier fo	
SELECTIVITY stop band atten. 20 dB	± 0.8 ÷ ± 1.6 MHz	
MAX INPUT POWER	0.6 kW (selectivity ± 0.8 ÷ ± 1.6 MHz)	
INSERTION LOSS	See table below	
CONNECTORS	NF	7/16 F
OPERATING TEMPERATURE RANGE	-10 to + 45°C (+14 to +113°F)	
OVER TEMPERATURE*	typical 30 K at max input power	
MATERIALS	Brass, aluminium, invar, teflon	
EXTERNAL FINISHING	Painted RAL 9005	
WEIGHT (approx)	18 kg (40 lb)	

* referred to ambient temperature. Recommended: [AmbientTemp. + OverTemp.] ≤70°C (158°F)

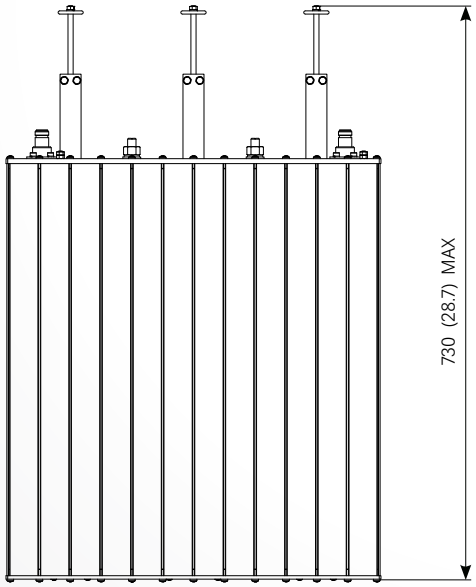

INSERTION LOSS at carrier fo (dB)

FREQUENCY (MHz)		87.5	98	108
SELECTIVITY (MHz)	± 1.6	0.52	0.54	0.56
	± 1.2	0.68	0.70	0.72
	± 0.8	0.96	0.98	1.00

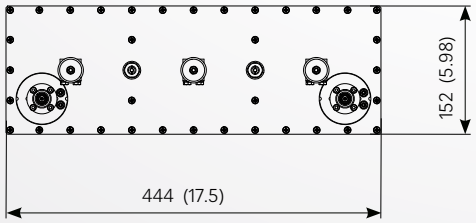

All dimensions are in millimeters (inches)

Specifications are subject to change without prior notice

CFM4-0.6

FM BANDPASS FILTER

FEATURES

- FM 0.6 kW bandpass filter
- 4 pole / 150 mm (5.9 in)
- adjustable selectivity

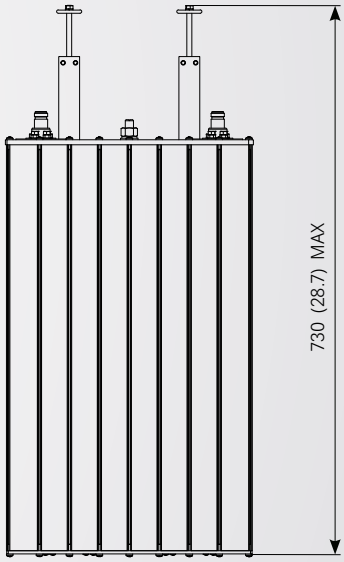

ELECTRICAL DATA

TYPE	CFM4-0.6/BB
FREQUENCY RANGE	87.5 ÷ 108 MHz
IMPEDANCE	50 ohm
RETURN LOSS	≥26 dB at carrier fo
SELECTIVITY stop band atten. 20 dB	± 0.6 ÷ ± 1.2 MHz
MAX INPUT POWER	0.6 kW (selectivity ± 0.6 ÷ ± 1.2 MHz)
INSERTION LOSS	See table below
CONNECTORS	7/16 F
OPERATING TEMPERATURE RANGE	-10 to + 45°C (+14 to +113°F)
OVER TEMPERATURE*	typical 30 K at max input power
MATERIALS	Brass, aluminium, invar, teflon
EXTERNAL FINISHING	Painted RAL 9005
WEIGHT (approx)	24 kg (53 lb)

* referred to ambient temperature. Recommended: [AmbientTemp. + OverTemp.] ≤70°C (158°F)

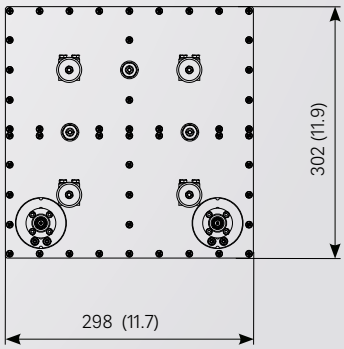

All dimensions are in millimeters (inches)

INSERTION LOSS at carrier fo (dB)

FREQUENCY (MHz)		87.5	98	108
SELECTIVITY (MHz)	± 1.2	0.82	0.85	0.88
	± 1.0	0.90	0.94	0.98
	± 0.8	1.08	1.13	1.18
	± 0.6	1.38	1.44	1.50

CFM2-1.2

FM BANDPASS FILTER

FEATURES

- FM 1.2 kW bandpass filter
- 2 pole / 150 mm (5.9 in)
- adjustable selectivity

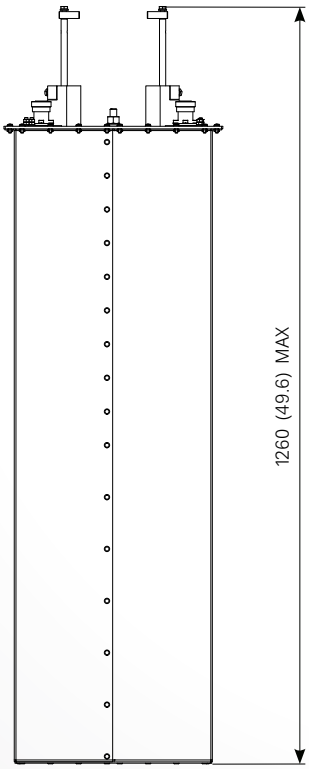

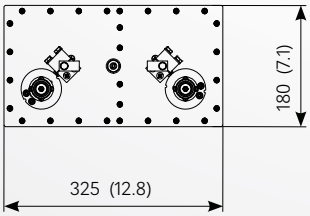

All dimensions are in millimeters (inches)

ELECTRICAL DATA

TYPE	CFM2-1.2/BB	CFM2-1.2/CC
FREQUENCY RANGE	87.5 ÷ 108 MHz	
IMPEDANCE	50 ohm	
RETURN LOSS	≥28 dB at carrier fo	
SELECTIVITY stop band atten. 20 dB	± 1.6 ÷ ± 2.0 MHz	
MAX INPUT POWER	1.2 kW (selectivity ± 1.6 ÷ ± 2.0 MHz)	
INSERTION LOSS	See table below	
CONNECTORS	7/16 F	7/8" Unfl.F
OPERATING TEMPERATURE RANGE	-10 to + 45°C (+14 to +113°F)	
OVER TEMPERATURE*	typical 30 K at max input power	
MATERIALS	Brass, aluminium, invar, teflon	
EXTERNAL FINISHING	Painted RAL 9005	
WEIGHT (approx)	11.5 kg (25 lb)	

* referred to ambient temperature. Recommended: [AmbientTemp. + OverTemp.] ≤70°C (158°F)

INSERTION LOSS at carrier fo (dB)

FREQUENCY (MHz)		87.5	98	108
SELECTIVITY (MHz)	± 2.0	0.34	0.37	0.40
	± 1.6	0.42	0.45	0.48

Specifications are subject to change without prior notice

by KATHREIN SIRA RADIO SYSTEMS

CFM3-1.2

FM BANDPASS FILTER

FEATURES

- FM 1.2 kW bandpass filter
- 3 pole / 150 mm (5.9 in)
- adjustable selectivity

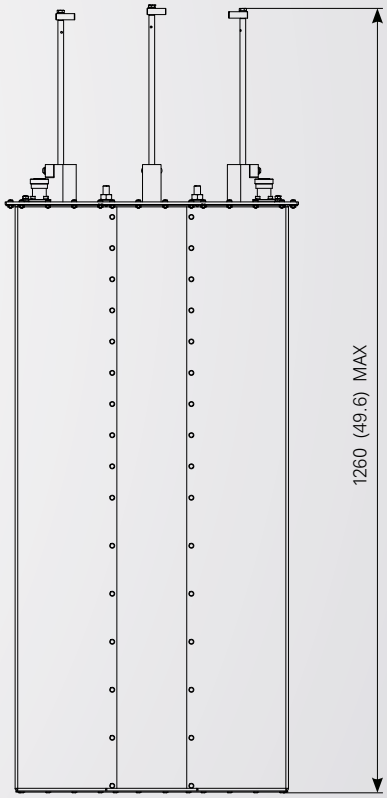

ELECTRICAL DATA

TYPE	CFM3-1.2/BB	CFM3-1.2/CC
FREQUENCY RANGE	87.5 ÷ 108 MHz	
IMPEDANCE	50 ohm	
RETURN LOSS	≥28 dB at carrier fo	
SELECTIVITY stop band atten. 20 dB	± 0.8 ÷ ± 1.6 MHz	
MAX INPUT POWER	1.2 kW (selectivity ± 1.2 ÷ ± 1.6 MHz) 0.8 kW (selectivity ± 0.8 MHz)	
INSERTION LOSS	See table below	
CONNECTORS	7/16 F	7/8" Unfl.F
OPERATING TEMPERATURE RANGE	-10 to + 45°C (+14 to +113°F)	
OVER TEMPERATURE*	typical 30 K at max input power	
MATERIALS	Brass, aluminium, invar, teflon	
EXTERNAL FINISHING	Painted RAL 9005	
WEIGHT (approx)	16 kg (35 lb)	

* referred to ambient temperature. Recommended: [AmbientTemp. + OverTemp.] ≤70°C (158°F)

INSERTION LOSS at carrier fo (dB)

FREQUENCY (MHz)		87.5	98	108
SELECTIVITY (MHz)	± 1.6	0.43	0.44	0.45
	± 1.2	0.54	0.56	0.58
	± 0.8	0.74	0.78	0.82

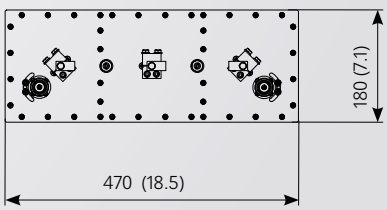

All dimensions are in millimeters (inches)

CFM4-1.2

FM BANDPASS FILTER

FEATURES

- FM 1.2 kW bandpass filter
- 4 pole / 150 mm (5.9 in)
- adjustable selectivity

ELECTRICAL DATA

TYPE	CFM4-1.2/BB	CFM4-1.2/CC
FREQUENCY RANGE	87.5 ÷ 108 MHz	
IMPEDANCE	50 ohm	
RETURN LOSS	≥28 dB at carrier fo	
SELECTIVITY stop band atten. 20 dB	± 0.6 ÷ ± 1.2 MHz	
MAX INPUT POWER	1.2 kW (selectivity ± 1.2 MHz) 1.0 kW (selectivity ± 1.0 MHz) 0.8 kW (selectivity ± 0.8 MHz) 0.6 kW (selectivity ± 0.6 MHz)	
INSERTION LOSS	See table below	
CONNECTORS	7/16 F	7/8" Unfl.F
OPERATING TEMPERATURE RANGE	-10 to + 45°C (+14 to +113°F)	
OVER TEMPERATURE*	typical 30 K at max input power	
MATERIALS	Brass, aluminium, invar, teflon	
EXTERNAL FINISHING	Painted RAL 9005	
WEIGHT (approx)	21 kg (46 lb)	

* referred to ambient temperature. Recommended: [AmbientTemp. + OverTemp.] ≤70°C (158°F)

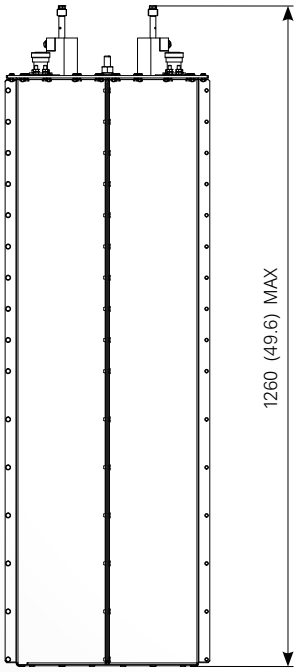

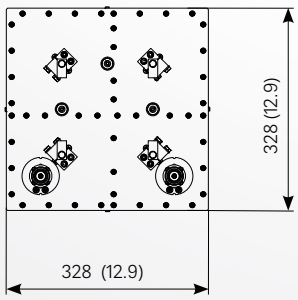

All dimensions are in millimeters (inches)

INSERTION LOSS at carrier fo (dB)

FREQUENCY (MHz)		87.5	98	108
SELECTIVITY (MHz)	± 1.2	0.59	0.62	0.65
	± 1.0	0.67	0.71	0.75
	± 0.8	0.81	0.85	0.89
	± 0.6	1.04	1.08	1.12

Specifications are subject to change without prior notice

CFM6ELL-1.2

FM BANDPASS FILTER

FEATURES

- FM 1.2 kW bandpass filter
- 6 pole / 200 mm (7.9 in)
- adjustable selectivity

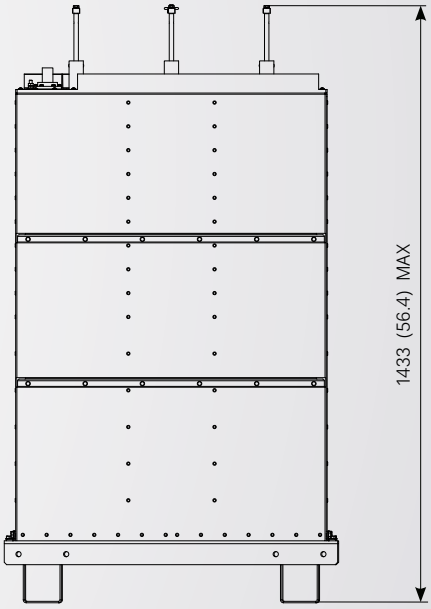

ELECTRICAL DATA

TYPE	CFM6ELL-1.2/CD (DC)
FREQUENCY RANGE	87.5 ÷ 108 MHz
IMPEDANCE	50 ohm
RETURN LOSS	≥28 dB at carrier fo
SELECTIVITY stop band atten. 20 dB	± 0.3 ÷ ± 0.4 MHz
MAX INPUT POWER	1.2 kW (selectivity ± 0.4 MHz) 1.0 kW (selectivity ± 0.3 MHz)
INSERTION LOSS	See table below
CONNECTORS	1–5/8" Unfl.F 7/8" Unfl.F
OPERATING TEMPERATURE RANGE	-10 to + 45°C (+14 to +113°F)
OVER TEMPERATURE*	typical 30 K at max input power
MATERIALS	Brass, aluminium, invar, iron, teflon
EXTERNAL FINISHING	Painted RAL 9005
WEIGHT (approx)	59 kg (130 lb)

* referred to ambient temperature. Recommended: [AmbientTemp. + OverTemp.] ≤70°C (158°F)

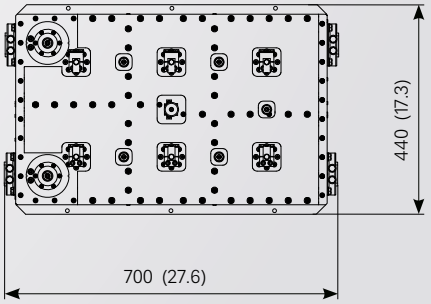

All dimensions are in millimeters (inches)

INSERTION LOSS at carrier fo (dB)

FREQUENCY (MHz)		87.5	98	108
SELECTIVITY (MHz)	± 0.4	1.30	1.38	1.45
	± 0.3	1.75	1.83	1.90

CFM2-2

FM BANDPASS FILTER

FEATURES

- FM 2 kW bandpass filter
- 2 pole / 150 mm (5.9 in)
- adjustable selectivity

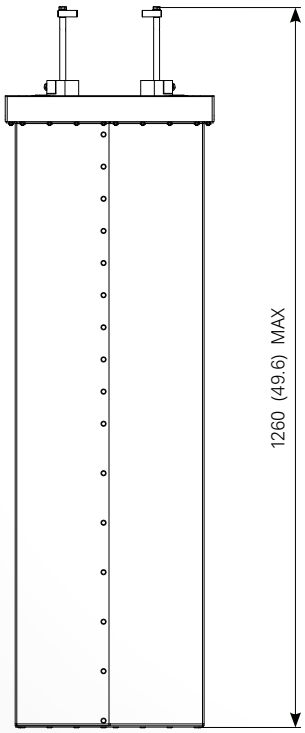

ELECTRICAL DATA

TYPE	CFM2-2/BB	CFM2-2/CC
FREQUENCY RANGE	87.5 ÷ 108 MHz	
IMPEDANCE	50 ohm	
RETURN LOSS	≥28 dB at carrier fo	
SELECTIVITY stop band atten. 20 dB	± 1.6 ÷ ± 2.0 MHz	
MAX INPUT POWER	2.0 kW (selectivity ± 2.0 MHz) 1.5 kW (selectivity ± 1.6 MHz)	
INSERTION LOSS	See table below	
CONNECTORS	7/16 F	7/8" Unfl.F
OPERATING TEMPERATURE RANGE	-10 to + 45°C (+14 to +113°F)	
OVER TEMPERATURE*	typical 30 K at max input power	
MATERIALS	Brass, aluminium, invar, teflon	
EXTERNAL FINISHING	Painted RAL 9005	
WEIGHT (approx)	15 kg (33 lb)	

* referred to ambient temperature. Recommended: [AmbientTemp. + OverTemp.] ≤70°C (158°F)

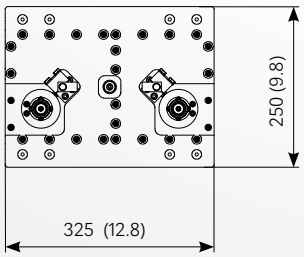

All dimensions are in millimeters (inches)

INSERTION LOSS at carrier fo (dB)

FREQUENCY (MHz)		87.5	98	108
SELECTIVITY (MHz)	± 2.0	0.34	0.37	0.40
	± 1.6	0.42	0.45	0.48

Specifications are subject to change without prior notice

CFM3-2

FM BANDPASS FILTER

FEATURES

- FM 2 kW bandpass filter
- 3 pole / 150 mm (5.9 in)
- adjustable selectivity

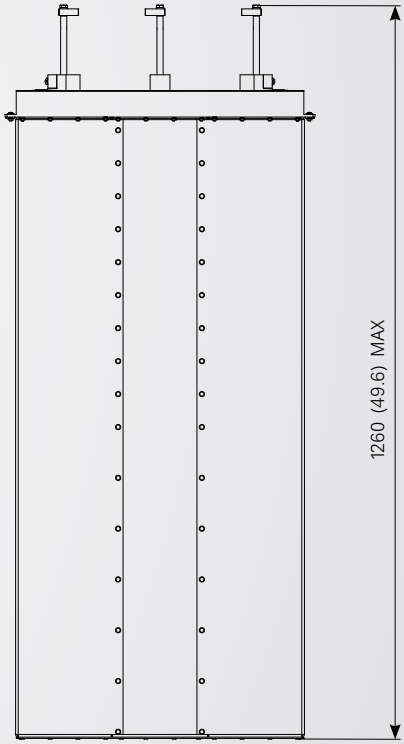

ELECTRICAL DATA

TYPE	CFM3-2/BB	CFM3-2/CC
FREQUENCY RANGE	87.5 ÷ 108 MHz	
IMPEDANCE	50 ohm	
RETURN LOSS	≥28 dB at carrier fo	
SELECTIVITY stop band atten. 20 dB	± 0.8 ÷ ± 1.6 MHz	
MAX INPUT POWER	2.0 kW (selectivity ± 1.6 MHz) 1.5 kW (selectivity ± 1.2 MHz) 1.2 kW (selectivity ± 0.8 MHz)	
INSERTION LOSS	See table below	
CONNECTORS	7/16 F	7/8" Unfl.F
OPERATING TEMPERATURE RANGE	-10 to + 45°C (+14 to +113°F)	
OVER TEMPERATURE*	typical 30 K at max input power	
MATERIALS	Brass, aluminium, invar, teflon	
EXTERNAL FINISHING	Painted RAL 9005	
WEIGHT (approx)	18 kg (40 lb)	

* referred to ambient temperature. Recommended: [AmbientTemp. + OverTemp.] ≤70°C (158°F)

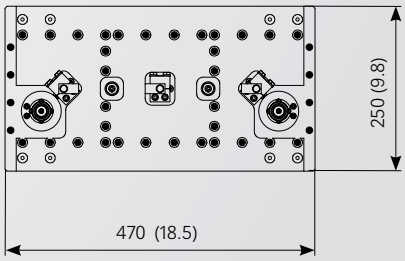

All dimensions are in millimeters (inches)

INSERTION LOSS at carrier fo (dB)

FREQUENCY (MHz)		87.5	98	108
SELECTIVITY (MHz)	± 1.6	0.43	0.44	0.45
	± 1.2	0.54	0.56	0.58
	± 0.8	0.74	0.78	0.82

CFM4-2

FM BANDPASS FILTER

FEATURES

- FM 2 kW bandpass filter
- 4 pole / 150 mm (5.9 in)
- adjustable selectivity

ELECTRICAL DATA

TYPE	CFM4-2/BB	CFM4-2/CC
FREQUENCY RANGE	87.5 ÷ 108 MHz	
IMPEDANCE	50 ohm	
RETURN LOSS	≥28 dB at carrier fo	
SELECTIVITY stop band atten. 20 dB	± 0.6 ÷ ± 1.2 MHz	
MAX INPUT POWER	2.0 kW (selectivity ± 1.2 MHz) 1.7 kW (selectivity ± 1.0 MHz) 1.5 kW (selectivity ± 0.8 MHz) 1.2 kW (selectivity ± 0.6 MHz)	
INSERTION LOSS	See table below	
CONNECTORS	7/16 F	7/8" Unfl.F
OPERATING TEMPERATURE RANGE	-10 to + 45°C (+14 to +113°F)	
OVER TEMPERATURE*	typical 30 K at max input power	
MATERIALS	Brass, aluminium, invar, teflon	
EXTERNAL FINISHING	Painted RAL 9005	
WEIGHT (approx)	25 kg (55lb)	

* referred to ambient temperature. Recommended: [AmbientTemp. + OverTemp.] ≤70°C (158°F)

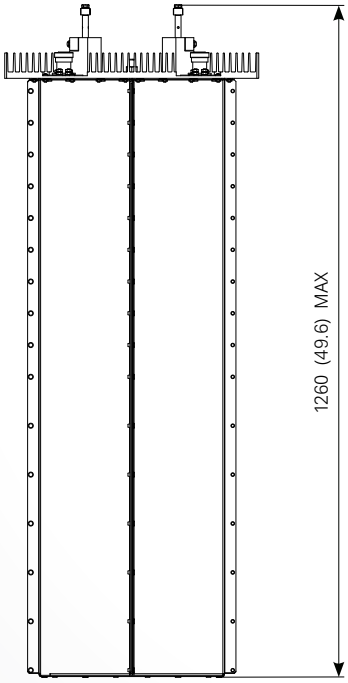

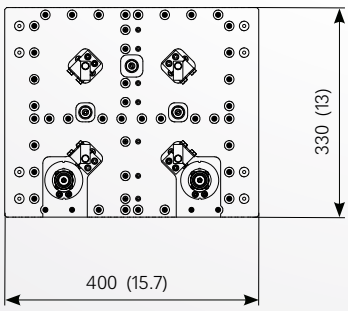

All dimensions are in millimeters (inches)

INSERTION LOSS at carrier fo (dB)

FREQUENCY (MHz)		87.5	98	108
SELECTIVITY (MHz)	± 1.2	0.59	0.62	0.65
	± 1.0	0.67	0.71	0.75
	± 0.8	0.81	0.85	0.89
	± 0.6	1.04	1.08	1.12

Specifications are subject to change without prior notice

CFM2-3

FM BANDPASS FILTER

FEATURES

- FM 3 kW bandpass filter
- 2 pole / 200 mm (7.9 in)
- adjustable selectivity

ELECTRICAL DATA

TYPE	CFM2-3/CC	CFM2-3/DD
FREQUENCY RANGE	87.5 ÷ 108 MHz	
IMPEDANCE	50 ohm	
RETURN LOSS	≥32 dB at carrier fo	
SELECTIVITY stop band atten. 20 dB	± 1.6 ÷ ± 2.0 MHz	
MAX INPUT POWER	3.0 kW (selectivity ± 2.0 MHz) 2.5 kW (selectivity ± 1.6 MHz)	
INSERTION LOSS	See table below	
CONNECTORS	7/8" Unfl.F	1-5/8" Unfl.F
OPERATING TEMPERATURE RANGE	-10 to + 45°C (+14 to +113°F)	
OVER TEMPERATURE*	typical 30 K at max input power	
MATERIALS	Brass, aluminium, invar, teflon	
EXTERNAL FINISHING	Painted RAL 9005	
WEIGHT (approx)	17.5 kg (39 lb)	

* referred to ambient temperature. Recommended: [AmbientTemp. + OverTemp.] ≤70°C (158°F)

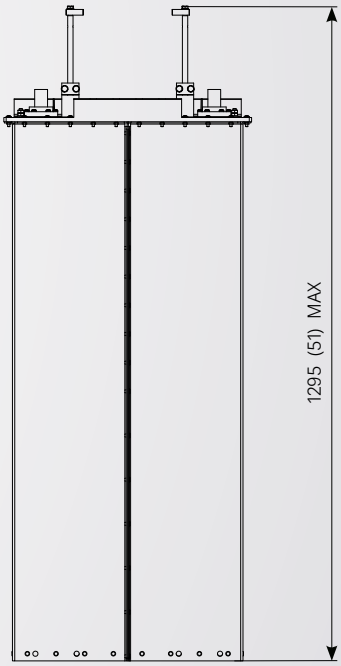

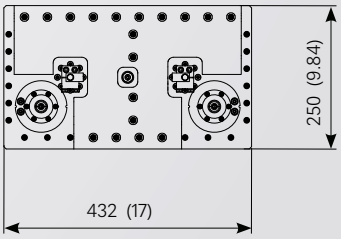

All dimensions are in millimeters (inches)

INSERTION LOSS at carrier fo (dB)

FREQUENCY (MHz)		87.5	98	108
SELECTIVITY (MHz)	± 2.0	0.24	0.29	0.30
	± 1.6	0.29	0.34	0.35

CFM3-3

FM BANDPASS FILTER

FEATURES

- FM 3 kW bandpass filter
- 3 pole / 200 mm (7.9 in)
- adjustable selectivity

ELECTRICAL DATA

TYPE	CFM3-3/CC	CFM3-3/DD
FREQUENCY RANGE	87.5 ÷ 108 MHz	
IMPEDANCE	50 ohm	
RETURN LOSS	≥32 dB at carrier fo	
SELECTIVITY stop band atten. 20 dB	± 0.8 ÷ ± 1.6 MHz	
MAX INPUT POWER	3.0 kW (selectivity ± 1.6 MHz) 2.5 kW (selectivity ± 1.2 MHz) 1.5 kW (selectivity ± 0.8 MHz)	
INSERTION LOSS	See table below	
CONNECTORS	7/8" Unfl.F	1-5/8" Unfl.F
OPERATING TEMPERATURE RANGE	-10 to + 45°C (+14 to +113°F)	
OVER TEMPERATURE*	typical 30 K at max input power	
MATERIALS	Brass, aluminium, invar, teflon	
EXTERNAL FINISHING	Painted RAL 9005	
WEIGHT (approx)	25 kg (55 lb)	

* referred to ambient temperature. Recommended: [AmbientTemp. + OverTemp.] ≤70°C (158°F)

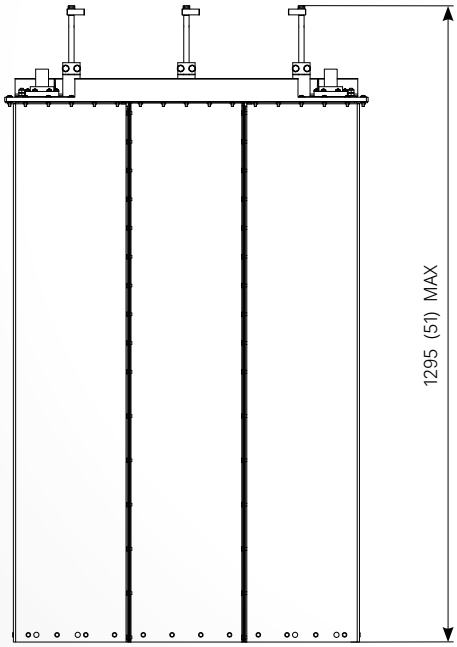

INSERTION LOSS at carrier fo (dB)

FREQUENCY (MHz)		87.5	98	108
SELECTIVITY (MHz)	± 1.6	0.25	0.27	0.29
	± 1.2	0.33	0.35	0.37
	± 0.8	0.47	0.51	0.55

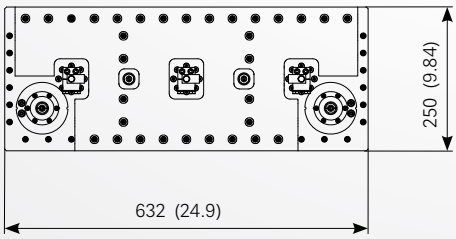

All dimensions are in millimeters (inches)

Specifications are subject to change without prior notice

CFM4-3

FM BANDPASS FILTER

FEATURES

- FM 3 kW bandpass filter
- 4 pole / 200 mm (7.9)
- adjustable selectivity

ELECTRICAL DATA

TYPE	CFM4-3/CC	CFM4-3/DD
FREQUENCY RANGE	87.5 ÷ 108 MHz	
IMPEDANCE	50 ohm	
RETURN LOSS	≥32 dB at carrier fo	
SELECTIVITY stop band atten. 20 dB	± 0.6 ÷ ± 1.2 MHz	
MAX INPUT POWER	3.0 kW (selectivity ± 1.0 MHz) 2.5 kW (selectivity ± 0.8 MHz) 1.5 kW (selectivity ± 0.6 MHz)	
INSERTION LOSS	See table below	
CONNECTORS	7/8" Unfl.F	1-5/8" Unfl.F
OPERATING TEMPERATURE RANGE	-10 to + 45°C (+14 to +113°F)	
OVER TEMPERATURE*	typical 30 K at max input power	
MATERIALS	Brass, aluminium, invar, teflon	
EXTERNAL FINISHING	Painted RAL 9005	
WEIGHT (approx)	33.5 kg (74 lb)	

* referred to ambient temperature. Recommended: [AmbientTemp. + OverTemp.] ≤70°C (158°F)

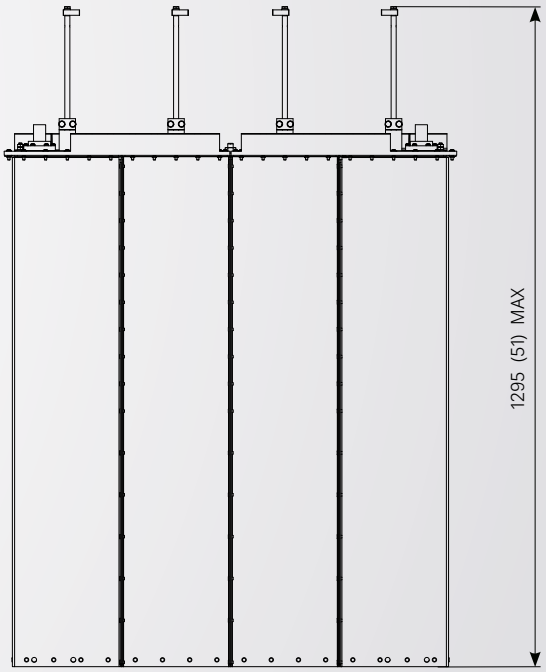

INSERTION LOSS at carrier fo (dB)

FREQUENCY (MHz)		87.5	98	108
SELECTIVITY (MHz)	± 1.0	0.45	0.46	0.47
	± 0.8	0.53	0.55	0.56
	± 0.6	0.68	0.70	0.71

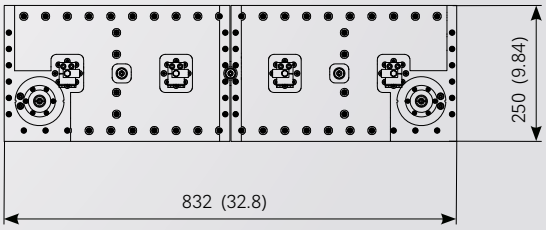

All dimensions are in millimeters (inches)

CFM2-5

FM BANDPASS FILTER

FEATURES

- FM 5 kW bandpass filter
- 2 pole / 350 mm (13.8 in)
- adjustable selectivity

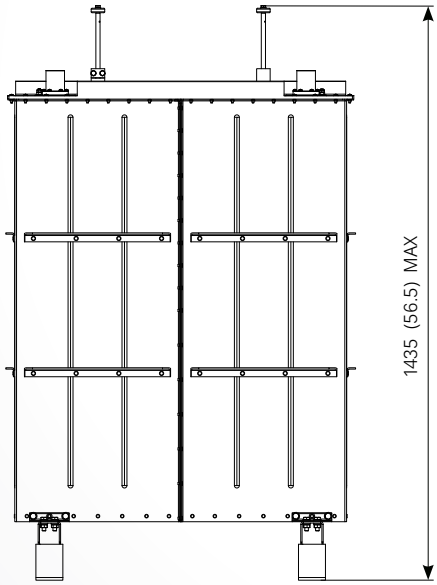

ELECTRICAL DATA

TYPE	CFM2-5/DD
FREQUENCY RANGE	87.5 ÷ 108 MHz
IMPEDANCE	50 ohm
RETURN LOSS	≥32 dB at carrier fo
SELECTIVITY stop band atten. 20 dB	± 1.6 ÷ ± 2.0 MHz
MAX INPUT POWER	6 kW (selectivity ± 2.0 MHz) 5 kW (selectivity ± 1.6 MHz)
INSERTION LOSS	See table below
CONNECTORS	1-5/8" Unfl.F
OPERATING TEMPERATURE RANGE	-10 to + 45°C (+14 to +113°F)
OVER TEMPERATURE*	typical 30 K at max input power
MATERIALS	Brass, aluminium, invar, iron, teflon
EXTERNAL FINISHING	Painted RAL 9005
WEIGHT (approx)	49 kg (108 lb)

* referred to ambient temperature. Recommended: [AmbientTemp. + OverTemp.] ≤70°C (158°F)

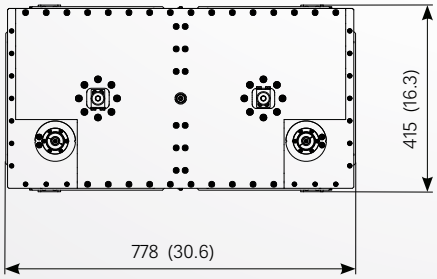

All dimensions are in millimeters (inches)

INSERTION LOSS at carrier fo (dB)

FREQUENCY (MHz)		87.5	98	108
SELECTIVITY (MHz)	± 2.0	0.18	0.19	0.20
	± 1.6	0.21	0.22	0.23

Specifications are subject to change without prior notice

CFM3-5

FM BANDPASS FILTER

FEATURES

- FM 5 kW bandpass filter
- 3 pole / 350 mm (13.8 in)
- adjustable selectivity

ELECTRICAL DATA

TYPE	CFM3-5/DD
FREQUENCY RANGE	87.5 ÷ 108 MHz
IMPEDANCE	50 ohm
RETURN LOSS	≥32 dB at carrier fo
SELECTIVITY stop band atten. 20 dB	± 0.8 ÷ ± 1.6 MHz
MAX INPUT POWER	7 kW (selectivity ± 1.6 MHz) 6 kW (selectivity ± 1.2 MHz) 5 kW (selectivity ± 0.8 MHz)
INSERTION LOSS	See table below
CONNECTORS	1-5/8" Unfl.F
OPERATING TEMPERATURE RANGE	-10 to + 45°C (+14 to +113°F)
OVER TEMPERATURE*	typical 30 K at max input power
MATERIALS	Brass, aluminium, invar, iron, teflon
EXTERNAL FINISHING	Painted RAL 9005
WEIGHT (approx)	70 kg (154 lb)

* referred to ambient temperature. Recommended: [AmbientTemp. + OverTemp.] ≤70°C (158°F)

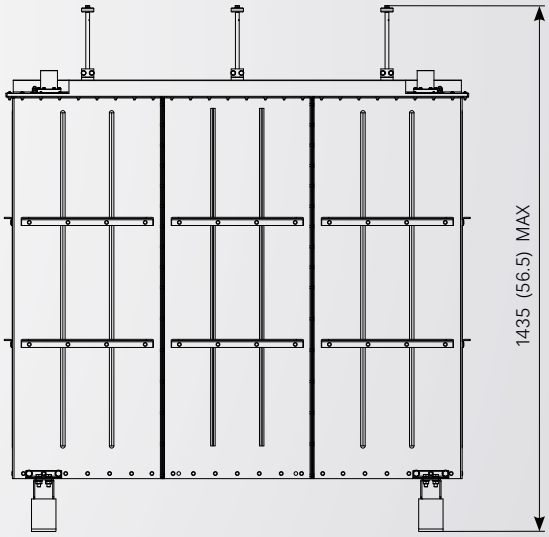

INSERTION LOSS at carrier fo (dB)

FREQUENCY (MHz)		87.5	98	108
SELECTIVITY (MHz)	± 1.6	0.24	0.27	0.28
	± 1.2	0.28	0.31	0.32
	± 0.8	0.40	0.44	0.45

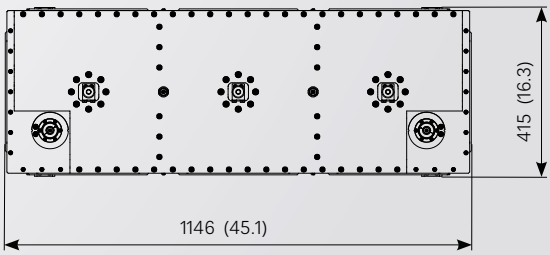

All dimensions are in millimeters (inches)

CFM4-5

FM BANDPASS FILTER

FEATURES

- FM 5 kW bandpass filter
- 4 pole / 350 mm (13.8 in)
- adjustable selectivity

ELECTRICAL DATA

TYPE	CFM4-5/DD
FREQUENCY RANGE	87.5 ÷ 108 MHz
IMPEDANCE	50 ohm
RETURN LOSS	≥32 dB at carrier fo
SELECTIVITY stop band atten. 20 dB	± 0.6 ÷ ± 1.0 MHz
MAX INPUT POWER	7 kW (selectivity ± 1.0 MHz) 6 kW (selectivity ± 0.8 MHz) 5 kW (selectivity ± 0.6 MHz)
INSERTION LOSS	See table below
CONNECTORS	1-5/8" Unfl.F
OPERATING TEMPERATURE RANGE	-10 to + 45°C (+14 to +113°F)
OVER TEMPERATURE*	typical 30 K at max input power
MATERIALS	Brass, aluminium, invar, iron, teflon
EXTERNAL FINISHING	Painted RAL 9005
WEIGHT (approx)	94 kg (207 lb)

* referred to ambient temperature. Recommended: [AmbientTemp. + OverTemp.] ≤70°C (158°F)

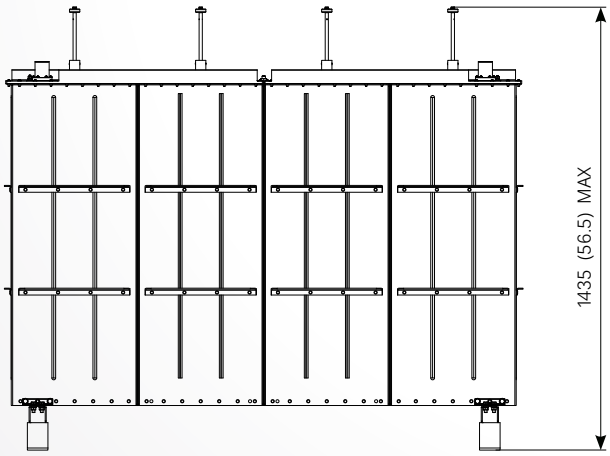

INSERTION LOSS at carrier fo (dB)

FREQUENCY (MHz)		87.5	98	108
SELECTIVITY (MHz)	± 1.0	0.34	0.36	0.38
	± 0.8	0.39	0.41	0.42
	± 0.6	0.47	0.49	0.50

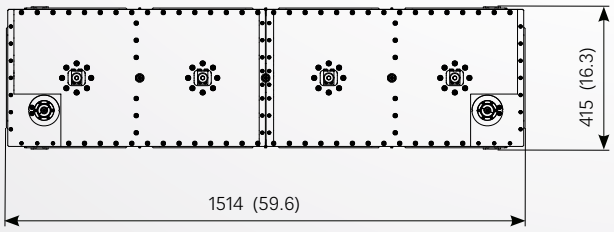

All dimensions are in millimeters (inches)

Specifications are subject to change without prior notice

CFM2-10

FM BANDPASS FILTER

FEATURES

- FM 10 kW bandpass filter
- 2 pole / 500 mm (19.7 in)
- adjustable selectivity

ELECTRICAL DATA

TYPE	CFM2-10/DD	CFM2-10/EE
FREQUENCY RANGE	87.5 ÷ 108 MHz	
IMPEDANCE	50 ohm	
RETURN LOSS	≥32 dB at carrier fo	
SELECTIVITY stop band atten. 20 dB	± 1.6 ÷ ± 2.0 MHz	
MAX INPUT POWER	12 kW (selectivity ± 2.0 MHz) 10 kW (selectivity ± 1.6 MHz)	
INSERTION LOSS	See table below	
CONNECTORS	1-5/8" Unfl.F	3-1/8" Unfl.F
OPERATING TEMPERATURE RANGE	-10 to + 45°C (+14 to +113°F)	
OVER TEMPERATURE*	typical 30 K at max input power	
MATERIALS	Brass, aluminium, invar, iron, teflon	
EXTERNAL FINISHING	Painted RAL 9005	
WEIGHT (approx)	80 kg (176 lb)	

* referred to ambient temperature. Recommended: [AmbientTemp. + OverTemp.] ≤70°C (158°F)

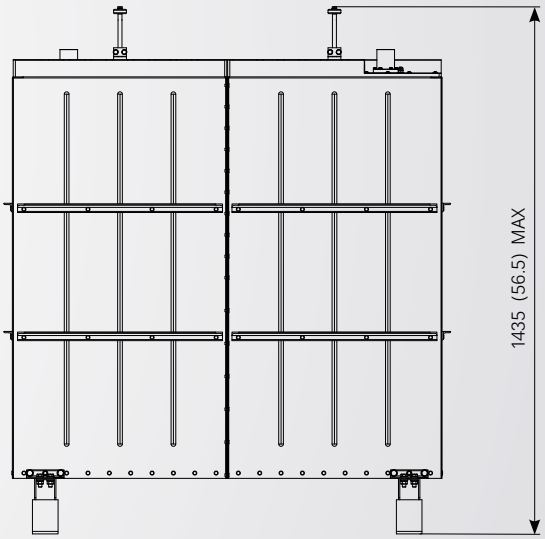

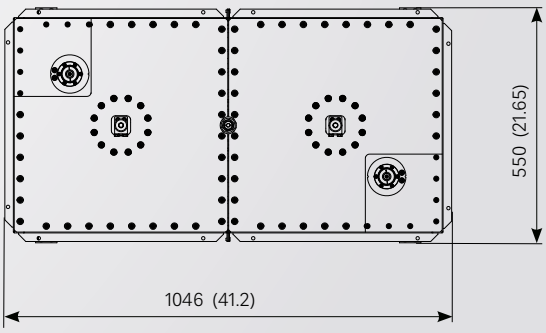

All dimensions are in millimeters (inches)

INSERTION LOSS at carrier fo (dB)

FREQUENCY (MHz)		87.5	98	108
SELECTIVITY (MHz)	± 2.0	0.12	0.125	0.13
	± 1.6	0.14	0.145	0.15

CFM3-10

FM BANDPASS FILTER

FEATURES

- FM 10 kW bandpass filter
- 3 pole / 500 mm (19.7 in)
- adjustable selectivity

ELECTRICAL DATA

TYPE	CFM3-10/DD	CFM3-10/EE
FREQUENCY RANGE	87.5 ÷ 108 MHz	
IMPEDANCE	50 ohm	
RETURN LOSS	≥32 dB at carrier fo	
SELECTIVITY stop band atten. 20 dB	± 0.8 ÷ ± 1.6 MHz	
MAX INPUT POWER	16 kW (selectivity ± 1.6 MHz) 13 kW (selectivity ± 1.2 MHz) 10 kW (selectivity ± 0.8 MHz)	
INSERTION LOSS	See table below	
CONNECTORS	1-5/8" Unfl.F	3-1/8" Unfl.F
OPERATING TEMPERATURE RANGE	-10 to + 45°C (+14 to +113°F)	
OVER TEMPERATURE*	typical 30 K at max input power	
MATERIALS	Brass, aluminium, invar, iron, teflon	
EXTERNAL FINISHING	Painted RAL 9005	
WEIGHT (approx)	115 kg (254 lb)	

* referred to ambient temperature. Recommended: [AmbientTemp. + OverTemp.] ≤70°C (158°F)

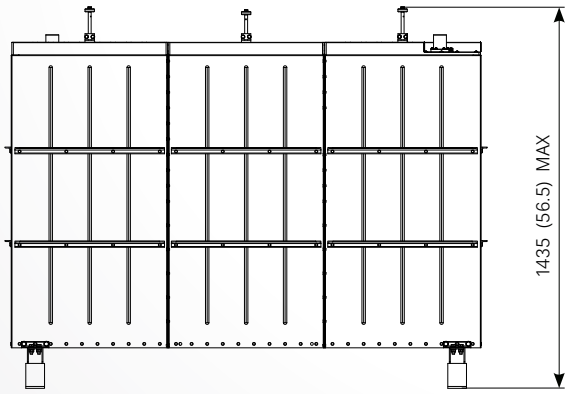

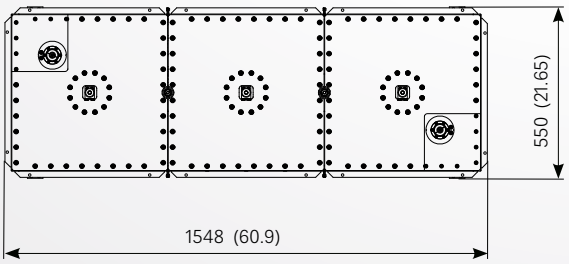

All dimensions are in millimeters (inches)

INSERTION LOSS at carrier fo (dB)

FREQUENCY (MHz)		87.5	98	108
SELECTIVITY (MHz)	± 1.6	0.14	0.15	0.16
	± 1.2	0.19	0.20	0.21
	± 0.8	0.25	0.26	0.27

Specifications are subject to change without prior notice

CFM4-10

FM BANDPASS FILTER

FEATURES

- FM 10 kW bandpass filter
- 4 pole / 500 mm (19.7 in)
- adjustable selectivity

ELECTRICAL DATA

TYPE	CFM4-10/DD	CFM4-10/EE
FREQUENCY RANGE	87.5 ÷ 108 MHz	
IMPEDANCE	50 ohm	
RETURN LOSS	≥32 dB at carrier fo	
SELECTIVITY stop band atten. 20 dB	± 0.6 ÷ ± 1.0 MHz	
MAX INPUT POWER	14 kW (selectivity ± 1.0 MHz) 12 kW (selectivity ± 0.8 MHz) 10 kW (selectivity ± 0.6 MHz)	
INSERTION LOSS	See table below	
CONNECTORS	1-5/8" Unfl.F	3-1/8" Unfl.F
OPERATING TEMPERATURE RANGE	-10 to + 45°C (+14 to +113°F)	
OVER TEMPERATURE*	typical 30 K at max input power	
MATERIALS	Brass, aluminium, invar, iron, teflon	
EXTERNAL FINISHING	Painted RAL 9005	
WEIGHT (approx)	153 kg (337 lb)	

* referred to ambient temperature. Recommended: [AmbientTemp. + OverTemp.] ≤70°C (158°F)

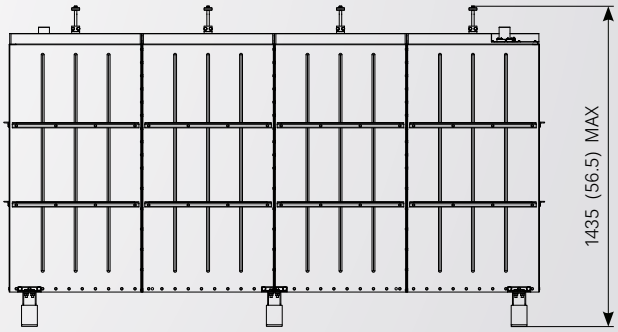

INSERTION LOSS at carrier fo (dB)

FREQUENCY (MHz)		87.5	98	108
SELECTIVITY (MHz)	± 1.0	0.25	0.26	0.27
	± 0.8	0.30	0.31	0.33
	± 0.6	0.36	0.38	0.41

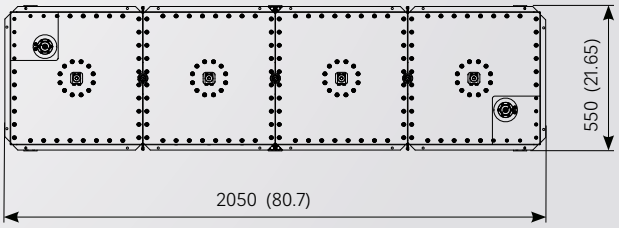

All dimensions are in millimeters (inches)

CFM4ELL-10

FM BANDPASS FILTER

FEATURES

- FM 10 kW bandpass filter
- 4 pole / 500 mm (19.7 in)
- adjustable selectivity

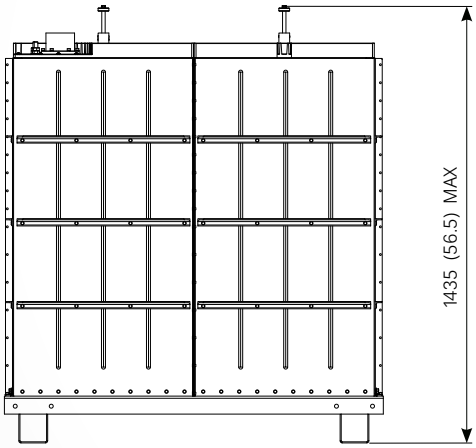

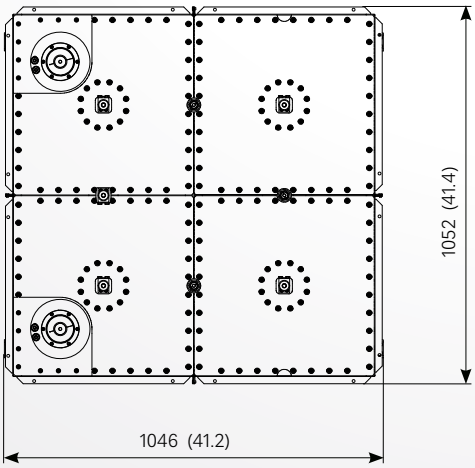

All dimensions are in millimeters (inches)

ELECTRICAL DATA

TYPE	CFM4ELL-10/EE
FREQUENCY RANGE	87.5 ÷ 108 MHz
IMPEDANCE	50 ohm
RETURN LOSS	≥32 dB at carrier fo
SELECTIVITY stop band atten. 25 dB	± 0.6 MHz
MAX INPUT POWER	10 kW (selectivity ± 0.6 MHz)
INSERTION LOSS	See table below
CONNECTORS	3-1/8" Unfl.F
OPERATING TEMPERATURE RANGE	-10 to + 45°C (+14 to +113°F)
OVER TEMPERATURE*	typical 30 K at max input power
MATERIALS	Brass, aluminium, invar, iron, teflon
EXTERNAL FINISHING	Painted RAL 9005
WEIGHT (approx)	148 kg (326 lb)

* referred to ambient temperature. Recommended: [AmbientTemp. + OverTemp.] ≤70°C (158°F)

INSERTION LOSS at carrier fo (dB)

FREQUENCY (MHz)		87.5	98	108
SELECTIVITY (MHz)	± 0.6	0.36	0.38	0.41

Specifications are subject to change without prior notice

by KATHREIN SIRA RADIO SYSTEMS

CFM2-20

FM BANDPASS FILTER

FEATURES

- FM 20 kW bandpass filter
- 2 pole / 750 mm (29.5 in)
- adjustable selectivity

ELECTRICAL DATA

TYPE	CFM2-20/EE
FREQUENCY RANGE	87.5 ÷ 108 MHz
IMPEDANCE	50 ohm
RETURN LOSS	≥32 dB at carrier fo
SELECTIVITY stop band atten. 20 dB	± 1.6 ÷ ± 2.0 MHz
MAX INPUT POWER	25 kW (selectivity ± 2.0 MHz) 20 kW (selectivity ± 1.6 MHz)
INSERTION LOSS	See table below
CONNECTORS	3-1/8" Unfl.F
OPERATING TEMPERATURE RANGE	-10 to + 45°C (+14 to +113°F)
OVER TEMPERATURE*	typical 30 K at max input power
MATERIALS	Brass, aluminium, invar, iron, teflon
EXTERNAL FINISHING	Painted RAL 9005
WEIGHT (approx)	175 kg (386 lb)

* referred to ambient temperature. Recommended: [AmbientTemp. + OverTemp.] ≤70°C (158°F)

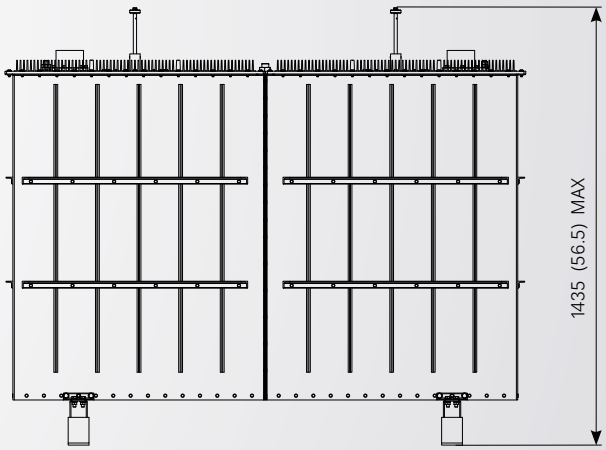

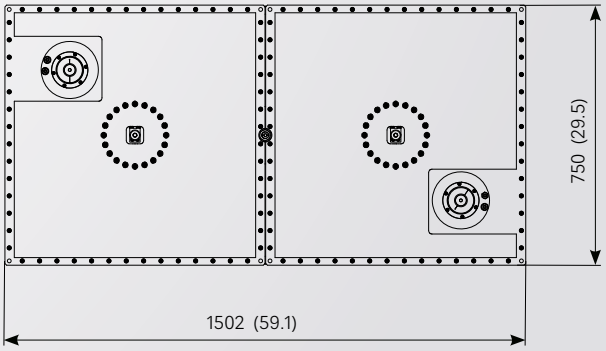

All dimensions are in millimeters (inches)

INSERTION LOSS at carrier fo (dB)

FREQUENCY (MHz)		87.5	98	108
SELECTIVITY (MHz)	± 2.0	0.08	0.085	0.09
	± 1.6	0.10	0.105	0.11

CFM3-20

FM BANDPASS FILTER

FEATURES

- FM 20 kW bandpass filter
- 3 pole / 750 mm (29.5 in)
- adjustable selectivity

ELECTRICAL DATA

TYPE	CFM3-20/EE
FREQUENCY RANGE	87.5 ÷ 108 MHz
IMPEDANCE	50 ohm
RETURN LOSS	≥32 dB at carrier fo
SELECTIVITY stop band atten. 20 dB	± 0.8 ÷ ± 1.6 MHz
MAX INPUT POWER	32 kW (selectivity ± 1.6 MHz) 26 kW (selectivity ± 1.2 MHz) 20 kW (selectivity ± 0.8 MHz)
INSERTION LOSS	See table below+
CONNECTORS	3-1/8" Unfl.F
OPERATING TEMPERATURE RANGE	-10 to + 45°C (+14 to +113°F)
OVER TEMPERATURE*	typical 30 K at max input power
MATERIALS	Brass, aluminium, invar, iron, teflon
EXTERNAL FINISHING	Painted RAL 9005
WEIGHT (approx)	266 kg (586 lb)

* referred to ambient temperature. Recommended: [AmbientTemp. + OverTemp.] ≤70°C (158°F)

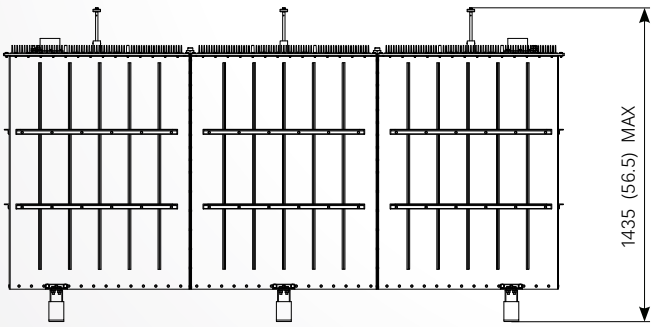

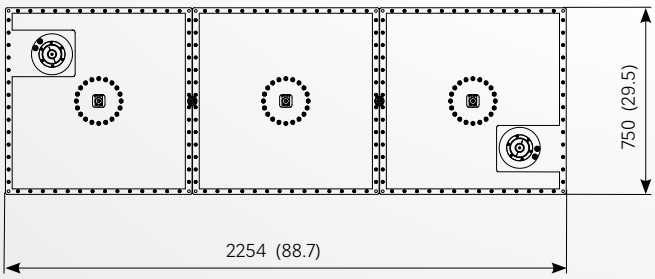

All dimensions are in millimeters (inches)

INSERTION LOSS at carrier fo (dB)

FREQUENCY (MHz)		87.5	98	108
SELECTIVITY (MHz)	± 1.6	0.08	0.085	0.09
	± 1.2	0.11	0.115	0.12
	± 0.8	0.16	0.165	0.17

Specifications are subject to change without prior notice

CFM4-20

FM BANDPASS FILTER

FEATURES

- FM 20 kW bandpass filter
- 4 pole / 750 mm (29.5 in)
- adjustable selectivity

ELECTRICAL DATA

TYPE	CFM4-20/EE
FREQUENCY RANGE	87.5 ÷ 108 MHz
IMPEDANCE	50 ohm
RETURN LOSS	≥32 dB at carrier fo
SELECTIVITY stop band atten. 20 dB	± 0.6 ÷ ± 1.0 MHz
MAX INPUT POWER	28 kW (selectivity ± 1.0 MHz) 24 kW (selectivity ± 0.8 MHz) 20 kW (selectivity ± 0.6 MHz)
INSERTION LOSS	See table below
CONNECTORS	3-1/8" Unfl.F
OPERATING TEMPERATURE RANGE	-10 to + 45°C (+14 to +113°F)
OVER TEMPERATURE*	typical 30 K at max input power
MATERIALS	Brass, aluminium, invar, iron, teflon
EXTERNAL FINISHING	Painted RAL 9005
WEIGHT (approx)	357 kg (787 lb)

* referred to ambient temperature. Recommended: [AmbientTemp. + OverTemp.] ≤70°C (158°F)

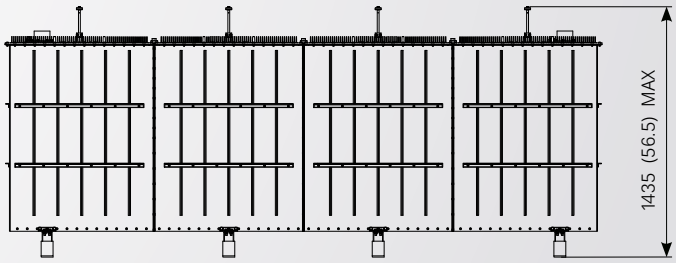

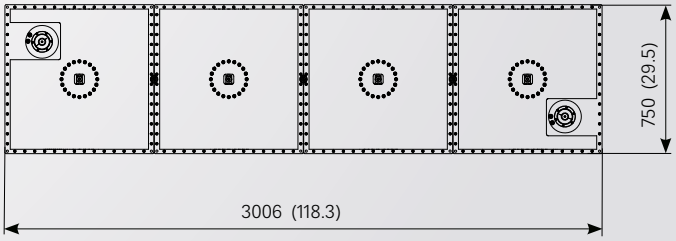

All dimensions are in millimeters (inches)

INSERTION LOSS at carrier fo (dB)

FREQUENCY (MHz)		87.5	98	108
SELECTIVITY (MHz)	± 1.0	0.19	0.20	0.21
	± 0.8	0.22	0.23	0.25
	± 0.6	0.26	0.28	0.31

FM COMBINERS

FM COMBINERS

Functioning principles of FM combiners	35
FM Star Type Combiners – 0.2	36
FM Star Type Combiners – 0.6	38
FM Star Type Combiners – 1.2	40
FM Star Type Combiners – 2	42
FM Star Type Combiners – 3	44
FM Star Type Combiners – 5	46
FM Star Type Combiners – 10	48
FM Star Type Combiners – 20	50
UC/FM/LB2-0.4	52
UC/FM/LB3-0.4	53
UC/FM/LB2-1.2	54
UC/FM/LB3-1.2	55
UC/FM/LB4-1.2	56
UC/FM/LB2-2	57
UC/FM/LB3-2	58
UC/FM/LB4-2	59
UC/FM/LB6ELL-2.4	60
UC/FM/LB2-4	61
UC/FM/LB3-4	62
UC/FM/LB4-4	63
UC/FM/LB2-6	64
UC/FM/LB3-6	66
UC/FM/LB4-6	68
UC/FM/LB2-10	70
UC/FM/LB3-10	72
UC/FM/LB4-10	74
UC/FM/LB2-20	76
UC/FM/LB3-20	78
UC/FM/LB4-20	80
UC/FM/LB4-20/F	82
UC/FM/LB2-40	84
UC/FM/LB3-40	85
UC/FM/LB4-40	86

CODING GUIDE

FM star type combiner (e.g.): QPLX UC/FM/ST2-3
QPLX = four frequencies (quadriplexer)
UC = unità combinatrice (combiner unit)
FM = FM band
ST = stella (star type)
2 = two pole
3 = power handling capability each input at 3kW

CODING GUIDE

FM double bridge combiner (e.g.): UC/FM/LB2-40
UC = unità combinatrice (combiner unit)
FM = FM band
LB = larga banda (wide band)
2 = two pole
40 = power handling capability NB input 40kW

Specifications are subject to change without prior notice

Functioning principles of FM combiners

FUNCTIONING PRINCIPLES OF FM DIRECTIONAL FILTER TYPE COMBINERS

The signal generated by a transmitter on frequency f1 is delivered to port 1 (Narrow Band input) of coupler A1 (3 dB coupler) which splits the power in two halves on to ports 2 and 3, whilst virtually no power goes to port 4 which is the absorber load port. The two half power signals flow through the band pass filters BP1 and BP2, both tuned on f1, and reach ports 2 and 3 of 3dB coupler A2.
Due to the phase difference between the two half signals, they get summed up on A2 (3 dB coupler), so that the whole f1 transmitter power (less NB input loss) gets to port 4 of A2, which actually is the combiner output.
Similarly, the signal from another transmitter (f2), is delivered to port 1 of coupler A2 (3 dB coupler).
The signal is split in two by the 3 dB coupler and flows toward the band pass filters.
Being these tuned on f1, f2 signal is rejected by the band pass filters, and as per the previous case, the phase difference between ports 2 and 3 of the 3 dB coupler allows the summed up half power f2 signals to get to the combiner output (port 4). By doing so both transmitter signals are summed up at the output and kept separated (isolation) by means of the 3 dB coupler directivity as well as by the selectivity of the band pass filters. In the event that a very high level of isolation is required in both directions (WB to NB and viceversa), it is recommended to add a band pass filter to the wide Band input or to add another combiner module to the same input so that there will be two Narrow Band inputs plus a "spare" wide Band input, winch can be used for emergency situations (any frequency of the FM spectrum can be operated through the WB input), or to add further modules in order to assemble multiplexers (n+1) with no limitations except of the power capacity of the last 3 dB coupler.

SCHEMATIC DIAGRAM

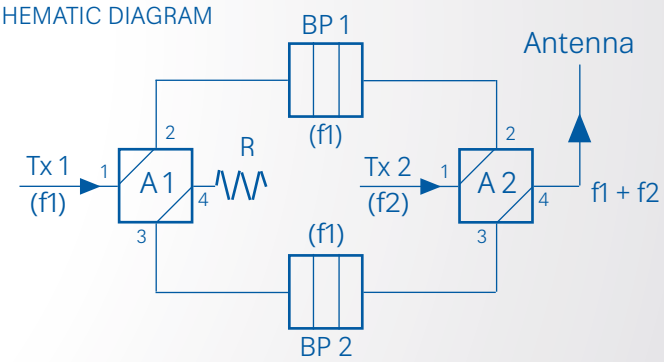

FUNCTIONING PRINCIPLES OF FM STAR TYPE COMBINER

The Star Type Combiner basically consists of parallel connecting several transmitters to a single antenna system through suitable bandpass filters, each one tuned on the transmitter frequency to which it is connected. The parallel connection is obtained by means of coaxial lines of critical lenght.
The RF power generated by TX1 (ch1) passes through filter BP1 to the star centre C to which the antenna is connected. In order to transfer to the antenna the total power from TX1,the short circuit of TX2 at TX1 frequency , must be converted to an open circuit at the star junction centre by means of L2.
The same applies for transferring power from transmitters TX2 and the related conversion lines L1, L2.

SCHEMATIC DIAGRAM

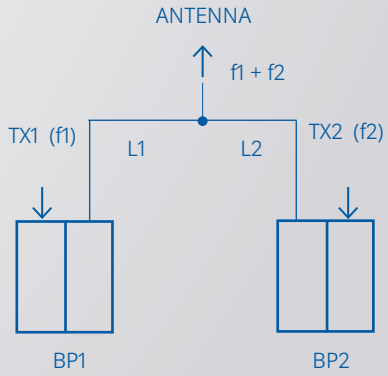

FM STAR TYPE COMBINERS – 0.2kW

FEATURES

- 2, 3 and 4 channel combiners
- 2 or 3 pole / 85 mm (3.3 in)
- temperature compensated
- adjustable selectivity
- available rack mounting solution

GENERAL FEATURES

FREQUENCY RANGE	87.5 ÷ 108 MHz
IMPEDANCE	50 ohm
VSWR	See table
MAX POWER	See table
CONNECTORS*	See table
WEIGHT	See table
OPERATING TEMPERATURE RANGE	-10 to + 45°C (+14 to +113°F)
OVER TEMPERATURE**	typical 30 K at max input power
ISOLATION	See table

* different connectors upon request
** referred to ambient temperature. Recommended: [AmbientTemp. + OverTemp.] ≤70°C (158°F)

ELECTRICAL AND MECHANICAL DATA

TYPE	FREQUENCIES SPACING (MHz)	MAX POWER PER CHANNEL (kW)	V.SW.R INPUT at fo	ISOLATION BETWEEN FREQ. (dB)	INSERTION LOSSES at fo (dB)	CONNECTORS* INPUTS / OUTPUT	WEIGHT (approx) kg (lb)
DPLX UC/FM/ST2-0.2	≥ 3.0	0.2	≤ 1.1	≥ 30	≤ 0.80	NF / NF or 7/16 F	11 (24)
	≥ 2.0	0.2	≤ 1.1	≥ 30	≤ 0.93		
DPLX UC/FM/ST3-0.2	≥ 2.0	0.2	≤ 1.1	≥ 30	≤ 1.05	NF / NF or 7/16 F	16 (35)
	≥ 1.6	0.2	≤ 1.1	≥ 30	≤ 1.18		
	≥ 1.2	0.2	≤ 1.1	≥ 30	≤ 1.60		
TPLX UC/FM/ST2-0.2	≥ 3.0	0.2	≤ 1.1	≥ 30	≤ 0.85	NF / NF or 7/16 F	17 (37)
	≥ 2.0	0.2	≤ 1.1	≥ 30	≤ 0.98		
TPLX UC/FM/ST3-0.2	≥ 2.0	0.2	≤ 1.1	≥ 30	≤ 1.10	NF / NF or 7/16 F	23 (51)
	≥ 1.6	0.2	≤ 1.1	≥ 30	≤ 1.23		
	≥ 1.2	0.2	≤ 1.1	≥ 30	≤ 1.65		
QPLX UC/FM/ST2-0.2	≥ 3.0	0.2	≤ 1.1	≥ 30	≤ 0.90	NF / NF or 7/16 F	22 (49)
	≥ 2.0	0.2	≤ 1.1	≥ 30	≤ 1.03		
QPLX UC/FM/ST3-0.2	≥ 2.0	0.2	≤ 1.1	≥ 30	≤ 1.15	NF / NF or 7/16 F	31 (68)
	≥ 1.6	0.2	≤ 1.1	≥ 30	≤ 1.28		
	≥ 1.2	0.2	≤ 1.1	≥ 30	≤ 1.70		

* different connectors upon request

Specifications are subject to change without prior notice

FM STAR TYPE COMBINERS – 0.2kW

MECHANICAL LAYOUT

DPLX UC/FM/ST2 – 0.2

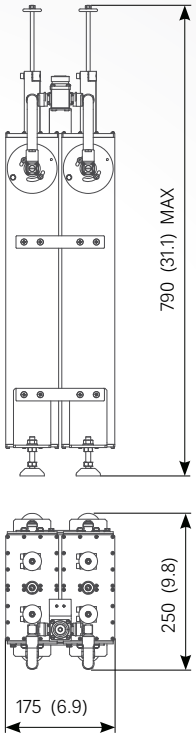

TPLX UC/FM/ST2 – 0.2

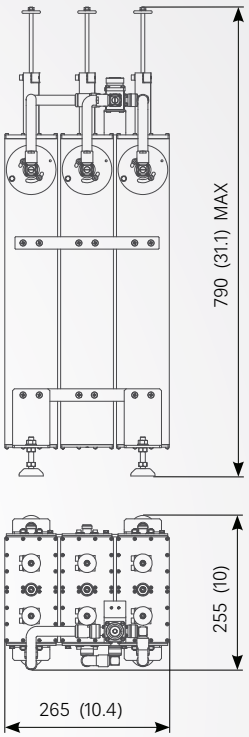

QPLX UC/FM/ST2 – 0.2

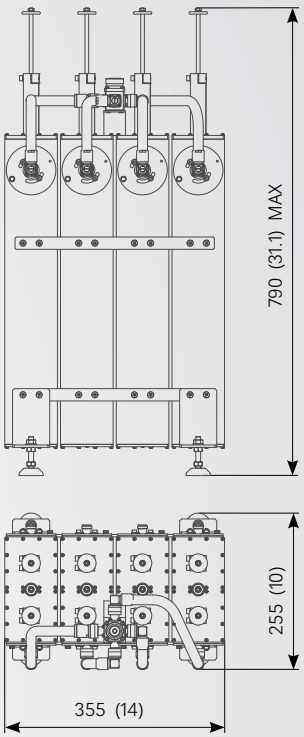

DPLX UC/FM/ST3 – 0.2

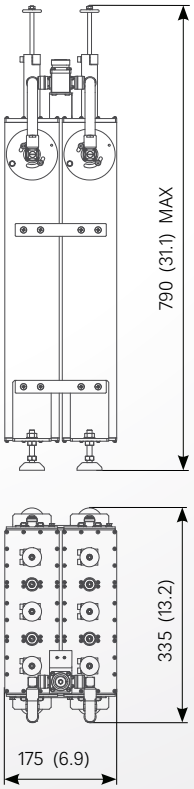

TPLX UC/FM/ST3 – 0.2

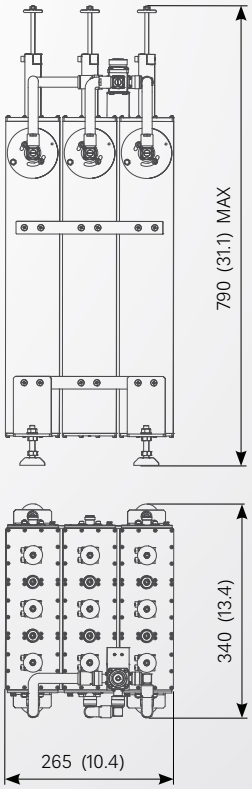

QPLX UC/FM/ST3 – 0.2

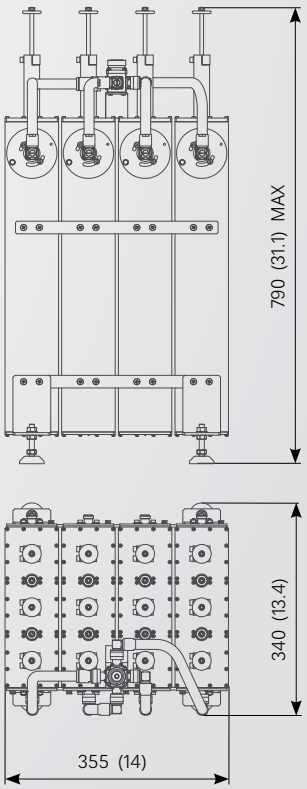

All dimensions are in millimeters (inches)

FM STAR TYPE COMBINERS – 0.6kW

FEATURES

- 2, 3 and 4 channel combiners
- 2 or 3 pole / 150 mm (5.9 in)
- temperature compensated
- adjustable selectivity

GENERAL FEATURES

FREQUENCY RANGE	87.5 ÷ 108 MHz
IMPEDANCE	50 ohm
VSWR	See table
MAX POWER	See table
CONNECTORS*	See table
WEIGHT	See table
OPERATING TEMPERATURE RANGE	-10 to + 45°C (+14 to +113°F)
OVER TEMPERATURE**	typical 30 K at max input power
ISOLATION	See table

* different connectors upon request
** referred to ambient temperature. Recommended: [AmbientTemp. + OverTemp.] ≤70°C (158°F)

ELECTRICAL AND MECHANICAL DATA

TYPE	FREQUENCIES SPACING (MHz)	MAX POWER PER CHANNEL (kW)	V.SW.R INPUT at fo	ISOLATION BETWEEN FREQ. (dB)	INSERTION LOSSES at fo (dB)	CONNECTORS* INPUTS / OUTPUT	WEIGHT (approx) kg (lb)
DPLX UC/FM/ST2-0.6	≥ 3.0	0.6	≤ 1.08	≥30	≤ 0.58	NF – 7/16 F	25 (55)
	≥ 2.0	0.6	≤ 1.08	≥ 30	≤ 0.68		
DPLX UC/FM/ST3-0.6	≥ 2.0	0.6	≤ 1.08	≥ 30	≤ 0.66	NF – 7/16 F	40 (88)
	≥ 1.6	0.6	≤ 1.08	≥ 30	≤ 0.82		
	≥ 1.2	0.6	≤ 1.08	≥ 30	≤ 1.10		
TPLX UC/FM/ST2-0.6	≥ 3.0	0.6	≤ 1.08	≥ 30	≤ 0.63	NF – 7/16 F	40 (88)
	≥ 2.0	0.6	≤ 1.08	≥ 30	≤ 0.73		
TPLX UC/FM/ST3-0.6	≥ 2.0	0.6	≤ 1.08	≥ 30	≤ 0.71	NF – 7/16 F	60 (132)
	≥ 1.6	0.6	≤ 1.08	≥ 30	≤ 0.87		
	≥ 1.2	0.6	≤ 1.08	≥ 30	≤ 1.15		
QPLX UC/FM/ST2-0.6	≥ 3.0	0.6	≤ 1.08	≥ 30	≤ 0.68	NF – 7/16 F	56 (123)
	≥ 2.0	0.6	≤ 1.08	≥ 30	≤ 0.78		
QPLX UC/FM/ST3-0.6	≥ 2.0	0.6	≤ 1.08	≥ 30	≤ 0.76	NF – 7/16 F	80 (176)
	≥ 1.6	0.6	≤ 1.08	≥ 30	≤ 0.92		
	≥ 1.2	0.6	≤ 1.08	≥ 30	≤ 1.20		

* different connectors upon request

Specifications are subject to change without prior notice

FM STAR TYPE COMBINERS – 0.6kW

MECHANICAL LAYOUT

DPLX UC/FM/ST2 – 0.6

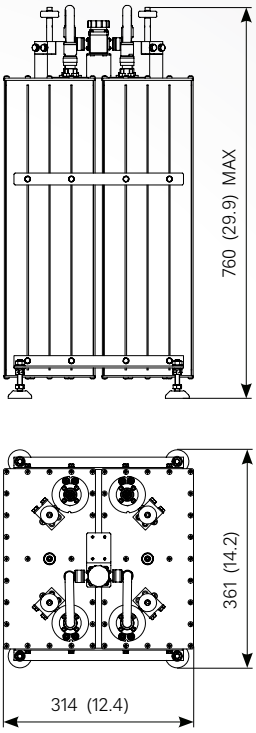

TPLX UC/FM/ST2 – 0.6

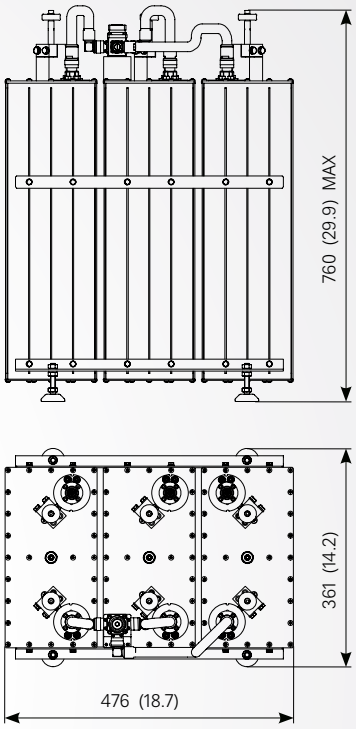

QPLX UC/FM/ST2 – 0.6

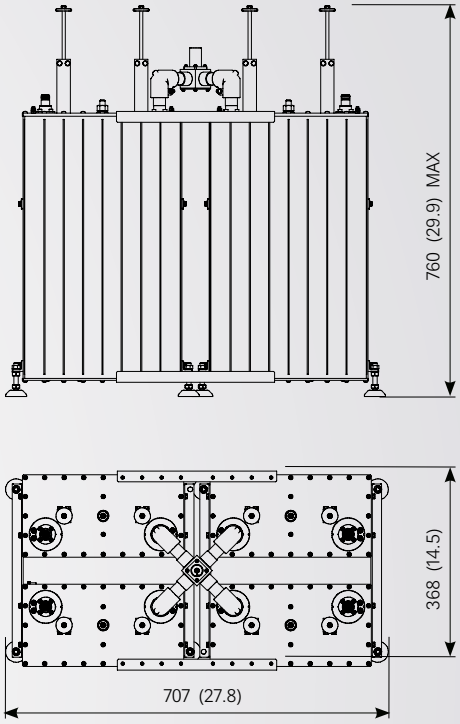

DPLX UC/FM/ST3 – 0.6

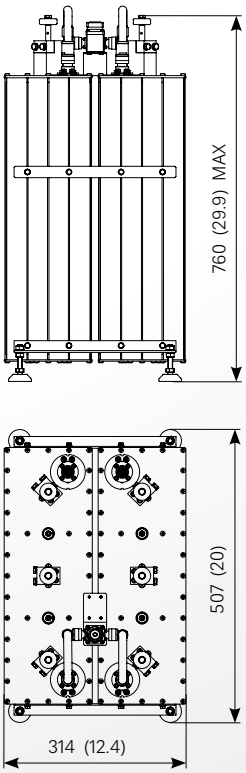

TPLX UC/FM/ST3 – 0.6

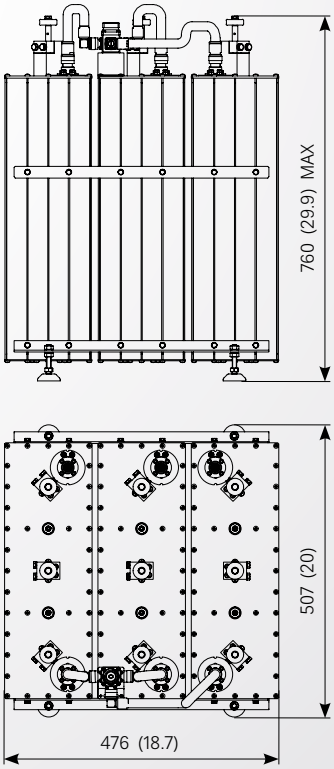

QPLX UC/FM/ST3 – 0.6

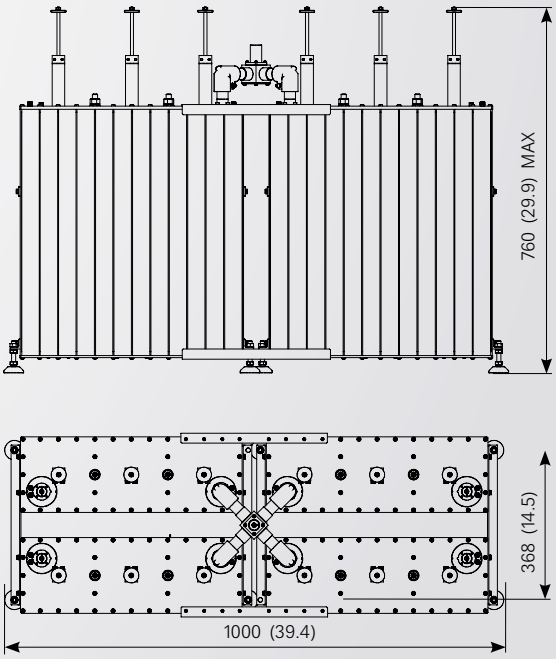

All dimensions are in millimeters (inches)

FM STAR TYPE COMBINERS – 1.2kW

FEATURES

- 2, 3 and 4 channel combiners
- 2 or 3 pole / 150 mm (5.9 in)
- temperature compensated
- adjustable selectivity

GENERAL FEATURES

FREQUENCY RANGE	87.5 ÷ 108 MHz
IMPEDANCE	50 ohm
VSWR	See table
MAX POWER	See table
CONNECTORS*	See table
WEIGHT	See table
OPERATING TEMPERATURE RANGE	-10 to + 45°C (+14 to +113°F)
OVER TEMPERATURE**	typical 30 K at max input power
ISOLATION	See table

* different connectors upon request
** referred to ambient temperature. Recommended: [AmbientTemp. + OverTemp.] ≤70°C (158°F)

ELECTRICAL AND MECHANICAL DATA

TYPE	FREQUENCIES SPACING (MHz)	MAX POWER PER CHANNEL (kW)	V.SW.R INPUT at fo	ISOLATION BETWEEN FREQ. (dB)	INSERTION LOSSES at fo (dB)	CONNECTORS* INPUTS / OUTPUT	WEIGHT (approx) kg (lb)
DPLX UC/FM/ST2-1.2	≥ 3.0	1.2	≤ 1.08	≥ 30	≤ 0.50	7/8" EIA / 7/8" EIA	33 (73)
	≥ 2.0	1.2	≤ 1.08	≥ 30	≤ 0.58		
DPLX UC/FM/ST3-1.2	≥ 2.0	1.2	≤ 1.08	≥ 30	≤ 0.55	7/8" EIA / 7/8" EIA	45 (99)
	≥ 1.6	1.2	≤ 1.08	≥ 30	≤ 0.68		
	≥ 1.2	0.8	≤ 1.08	≥ 30	≤ 0.92		
TPLX UC/FM/ST2-1.2	≥ 3.0	1.2	≤ 1.08	≥ 30	≤ 0.55	7/8" EIA / 7/8" EIA	50 (110)
	≥ 2.0	1.2	≤ 1.08	≥ 30	≤ 0.63		
TPLX UC/FM/ST3-1.2	≥ 2.0	1.2	≤ 1.08	≥ 30	≤ 0.60	7/8" EIA / 7/8" EIA	70 (154)
	≥ 1.6	1.2	≤ 1.08	≥ 30	≤ 0.73		
	≥ 1.2	0.8	≤ 1.08	≥ 30	≤ 0.97		
QPLX UC/FM/ST2-1.2	≥ 3.0	1.2	≤ 1.08	≥ 30	≤ 0.60	7/8" EIA / 7/8" EIA	65 (143)
	≥ 2.0	1.2	≤ 1.08	≥ 30	≤ 0.68		
QPLX UC/FM/ST3-1.2	≥ 2.0	1.2	≤ 1.08	≥ 30	≤ 0.65	7/8" EIA / 7/8" EIA	86 (190)
	≥ 1.6	1.2	≤ 1.08	≥ 30	≤ 0.78		
	≥ 1.2	0.8	≤ 1.08	≥ 30	≤ 1.02		

* different connectors upon request

Specifications are subject to change without prior notice

FM STAR TYPE COMBINERS – 1.2kW

MECHANICAL LAYOUT

DPLX UC/FM/ST2 – 1.2

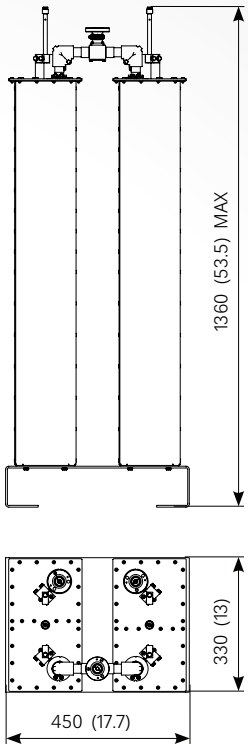

TPLX UC/FM/ST2 – 1.2

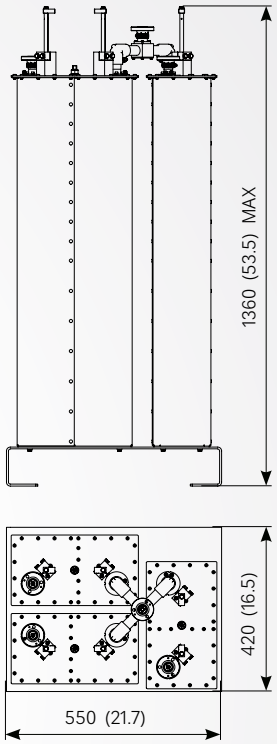

QPLX UC/FM/ST2 – 1.2

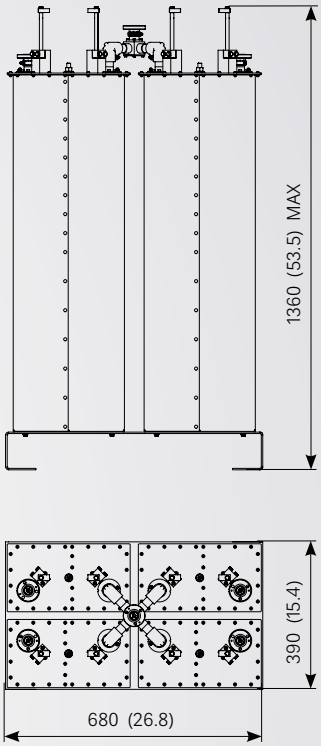

DPLX UC/FM/ST3 – 1.2

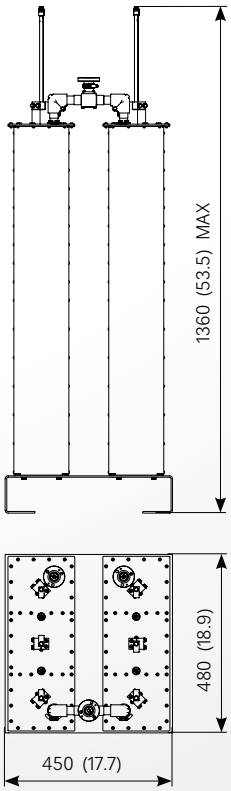

TPLX UC/FM/ST3 – 1.2

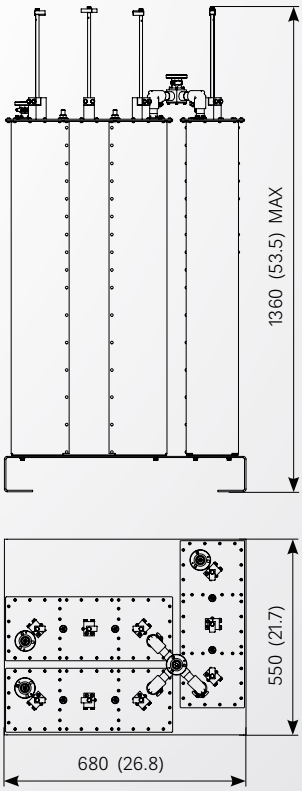

QPLX UC/FM/ST3 – 1.2

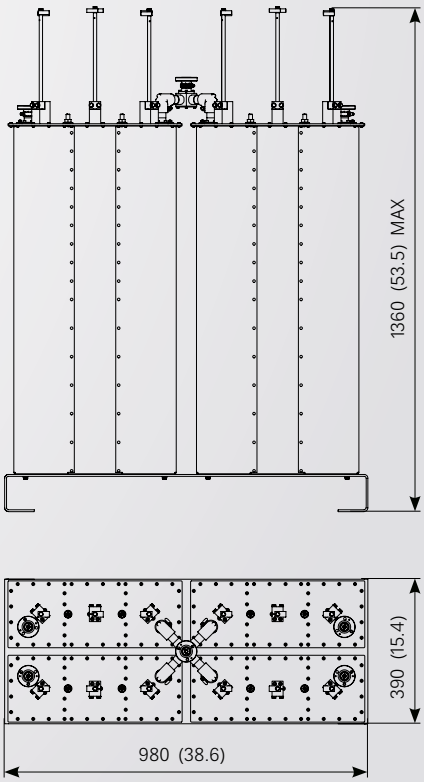

All dimensions are in millimeters (inches)

FM STAR TYPE COMBINERS – 2kW

FEATURES

- 2, 3 and 4 channel combiners
- 2 or 3 pole / 150 mm (5.9 in)
- temperature compensated
- adjustable selectivity

GENERAL FEATURES

FREQUENCY RANGE	87.5 ÷ 108 MHz
IMPEDANCE	50 ohm
VSWR	See table
MAX POWER	See table
CONNECTORS*	See table
WEIGHT	See table
OPERATING TEMPERATURE RANGE	-10 to + 45°C (+14 to +113°F)
OVER TEMPERATURE**	typical 30 K at max input power
ISOLATION	See table

* different connectors upon request
** referred to ambient temperature. Recommended: [AmbientTemp. + OverTemp.] ≤70°C (158°F)

ELECTRICAL AND MECHANICAL DATA

TYPE	FREQUENCIES SPACING (MHz)	MAX POWER PER CHANNEL (kW)	V.SW.R INPUT at fo	ISOLATION BETWEEN FREQ. (dB)	INSERTION LOSSES at fo (dB)	CONNECTORS* INPUTS / OUTPUT	WEIGHT (approx) kg (lb)
DPLX UC/FM/ST2-2	≥ 3.0	2.0	≤ 1.08	≥ 30	≤ 0.50	7/8" EIA / 7/8" EIA	38 (84)
	≥ 2.0	1.5	≤ 1.08	≥ 30	≤ 0.58		
DPLX UC/FM/ST3-2	≥ 2.0	2.0	≤ 1.08	≥ 30	≤ 0.55	7/8" EIA / 7/8" EIA	55 (121)
	≥ 1.6	1.5	≤ 1.08	≥ 30	≤ 0.68		
	≥ 1.2	1.2	≤ 1.08	≥ 30	≤ 0.92		
TPLX UC/FM/ST2-2	≥ 3.0	2.0	≤ 1.08	≥ 30	≤ 0.55	7/8" EIA / 7/8" EIA	61 (134)
	≥ 2.0	1.5	≤ 1.08	≥ 30	≤ 0.63		
TPLX UC/FM/ST3-2	≥ 2.0	2.0	≤ 1.08	≥ 30	≤ 0.60	7/8" EIA / 7/8" EIA	86 (190)
	≥ 1.6	1.5	≤ 1.08	≥ 30	≤ 0.73		
	≥ 1.2	1.2	≤ 1.08	≥ 30	≤ 0.97		
QPLX UC/FM/ST2-2	≥ 3.0	2.0	≤ 1.08	≥ 30	≤ 0.60	7/8" EIA / 1-5/8" EIA	75 (165)
	≥ 2.0	1.5	≤ 1.08	≥ 30	≤ 0.68		
QPLX UC/FM/ST3-2	≥ 2.0	2.0	≤ 1.08	≥ 30	≤ 0.65	7/8" EIA / 1-5/8" EIA	114 (251)
	≥ 1.6	1.5	≤ 1.08	≥ 30	≤ 0.78		
	≥ 1.2	1.2	≤ 1.08	≥ 30	≤ 1.02		

* different connectors upon request

Specifications are subject to change without prior notice

FM STAR TYPE COMBINERS – 2kW

MECHANICAL LAYOUT

DPLX UC/FM/ST2 – 2

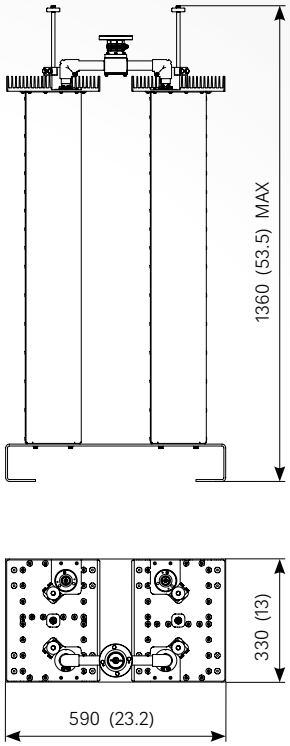

TPLX UC/FM/ST2 – 2

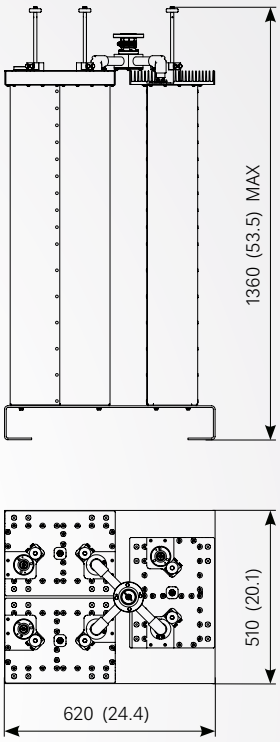

QPLX UC/FM/ST2 – 2

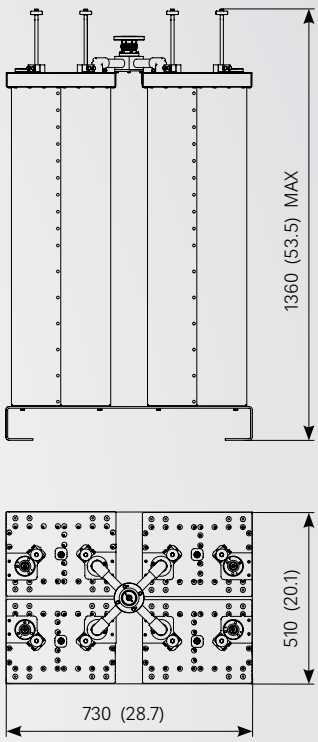

DPLX UC/FM/ST3 – 2

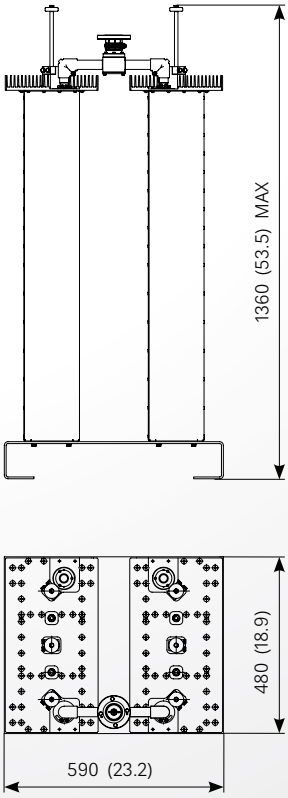

TPLX UC/FM/ST3 – 2

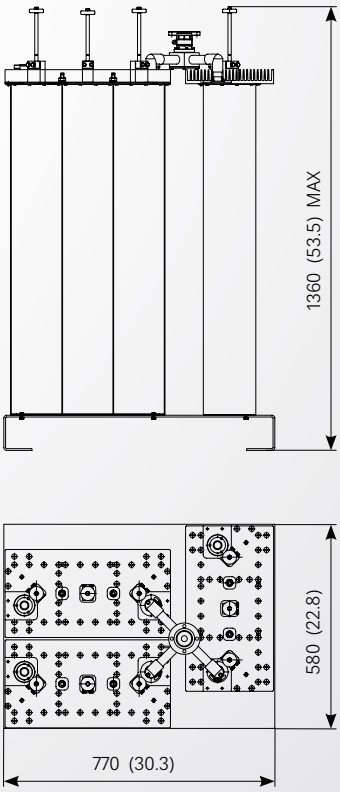

QPLX UC/FM/ST3 – 2

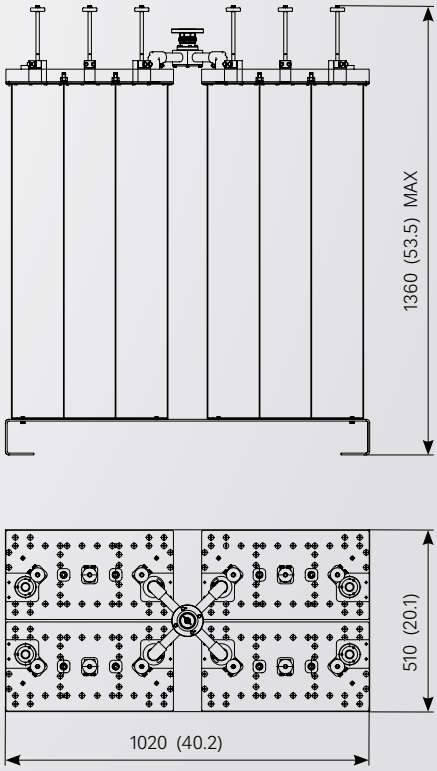

All dimensions are in millimeters (inches)

FM STAR TYPE COMBINERS – 3kW

FEATURES

- 2, 3 and 4 channel combiners
- 2 or 3 pole / 200 mm (7.9 in)
- temperature compensated
- adjustable selectivity

GENERAL FEATURES

FREQUENCY RANGE	87.5 ÷ 108 MHz
IMPEDANCE	50 ohm
VSWR	See table
MAX POWER	See table
CONNECTORS*	See table
WEIGHT	See table
OPERATING TEMPERATURE RANGE	-10 to + 45°C (+14 to +113°F)
OVER TEMPERATURE**	typical 30 K at max input power
ISOLATION	See table

* different conectors upon request
** referred to ambient temperature. Recommended: [AmbientTemp. + OverTemp.] ≤70°C (158°F)

ELECTRICAL AND MECHANICAL DATA

TYPE	FREQUENCIES SPACING (MHz)	MAX POWER PER CHANNEL (kW)	V.SW.R INPUT at fo	ISOLATION BETWEEN FREQ. (dB)	INSERTION LOSSES at fo (dB)	CONNECTORS* INPUTS / OUTPUT	WEIGHT (approx) kg (lb)
DPLX UC/FM/ST2-3	≥ 3.0	3.0	≤ 1.06	≥ 30	≤ 0.40	7/8" EIA / 1-5/8" Unfl.	43 (95)
	≥ 2.0	2.5	≤ 1.06	≥ 30	≤ 0.45		
DPLX UC/FM/ST3-3	≥ 2.0	3.0	≤ 1.06	≥ 30	≤ 0.39	7/8" EIA / 1-5/8" Unfl.	60 (132)
	≥ 1.6	2.5	≤ 1.06	≥ 30	≤ 0.47		
	≥ 1.2	1.5	≤ 1.06	≥ 30	≤ 0.65		
TPLX UC/FM/ST2-3	≥ 3.0	3.0	≤ 1.06	≥ 30	≤ 0.45	7/8" EIA / 1-5/8" Unfl.	60 (132)
	≥ 2.0	2.5	≤ 1.06	≥ 30	≤ 0.50		
TPLX UC/FM/ST3-3	≥ 2.0	3.0	≤ 1.06	≥ 30	≤ 0.44	7/8" EIA / 1-5/8" Unfl.	82 (181)
	≥ 1.6	2.5	≤ 1.06	≥ 30	≤ 0.52		
	≥ 1.2	1.5	≤ 1.06	≥ 30	≤ 0.70		
QPLX UC/FM/ST2-3	≥ 3.0	3.0	≤ 1.06	≥ 30	≤ 0.50	7/8" EIA / 1-5/8" Unfl.	80 (176)
	≥ 2.0	2.5	≤ 1.06	≥ 30	≤ 0.55		
QPLX UC/FM/ST3-3	≥ 2.0	3.0	≤ 1.06	≥ 30	≤ 0.49	7/8" EIA / 1-5/8" Unfl.	110 (243)
	≥ 1.6	2.5	≤ 1.06	≥ 30	≤ 0.57		
	≥ 1.2	1.5	≤ 1.06	≥ 30	≤ 0.75		

* different connectors upon request

Specifications are subject to change without prior notice

FM STAR TYPE COMBINERS – 3kW

MECHANICAL LAYOUT

DPLX UC/FM/ST2 – 3

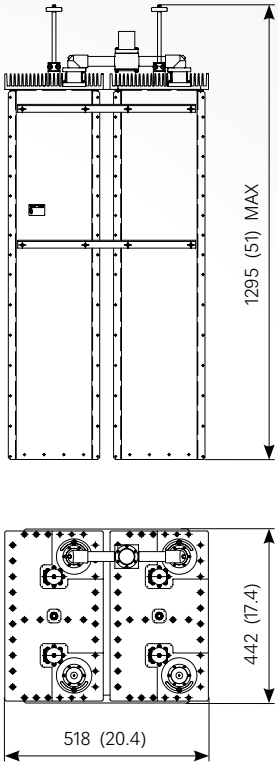

TPLX UC/FM/ST2 – 3

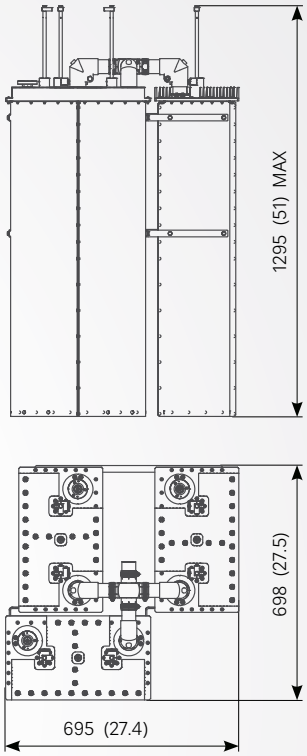

QPLX UC/FM/ST2 – 3

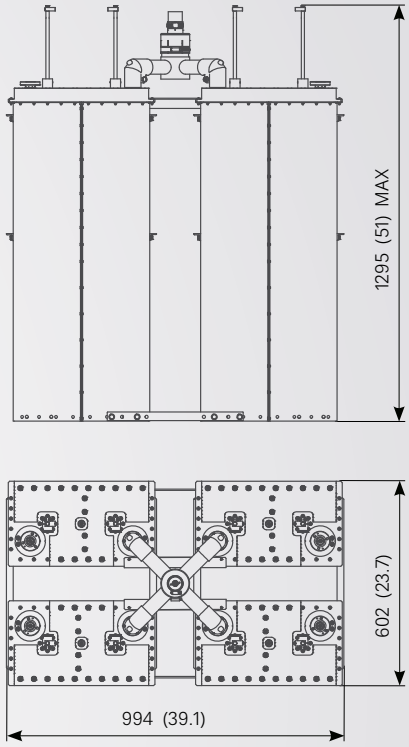

DPLX UC/FM/ST3 – 3

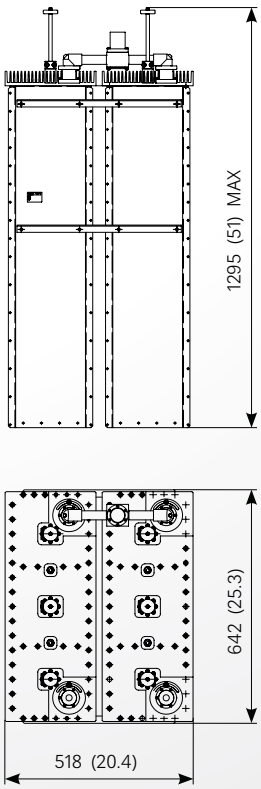

TPLX UC/FM/ST3 – 3

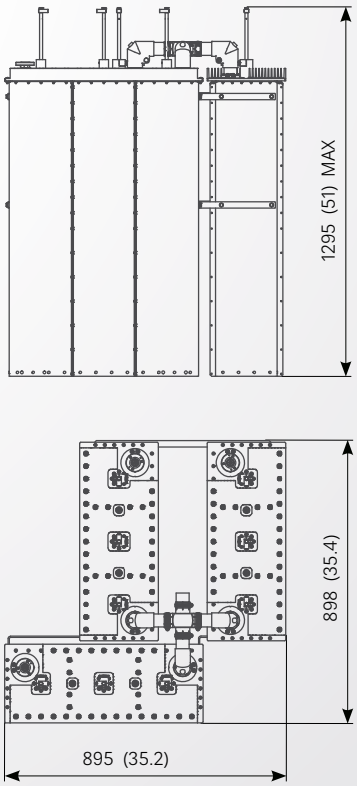

QPLX UC/FM/ST3 – 3

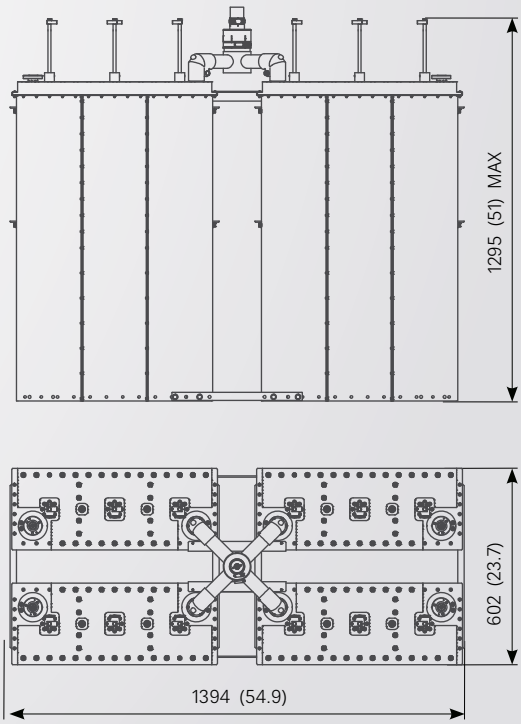

All dimensions are in millimeters (inches)

FM STAR TYPE COMBINERS – 5kW

FEATURES

- 2, 3 and 4 channel combiners
- 2 or 3 pole / 350 mm (13.8 in)
- temperature compensated
- adjustable selectivity

GENERAL FEATURES

FREQUENCY RANGE	87.5 ÷ 108 MHz
IMPEDANCE	50 ohm
VSWR	See table
MAX POWER	See table
CONNECTORS*	See table
WEIGHT	See table
OPERATING TEMPERATURE RANGE	-10 to + 45°C (+14 to +113°F)
OVER TEMPERATURE**	typical 30 K at max input power
ISOLATION	See table

* different connectors upon request
** referred to ambient temperature. Recommended: [AmbientTemp. + OverTemp.] ≤70°C (158°F)

ELECTRICAL AND MECHANICAL DATA

TYPE	FREQUENCIES SPACING (MHz)	MAX POWER ** PER CHANNEL (kW)	V.SW.R INPUT at fo	ISOLATION BETWEEN FREQ. (dB)	INSERTION LOSSES at fo (dB)	CONNECTORS* INPUTS / OUTPUT	WEIGHT (approx) kg (lb)
DPLX UC/FM/ST2-5	≥ 3.0	5	≤ 1.06	≥ 30	≤ 0.30	1-5/8" Unfl. / 1-5/8" Unfl.	106 (234)
	≥ 2.0	5	≤ 1.06	≥ 30	≤ 0.33		
DPLX UC/FM/ST3-5	≥ 2.0	5	≤ 1.06	≥ 30	≤ 0.38	1-5/8" Unfl. / 1-5/8" Unfl.	146 (322)
	≥ 1.6	5	≤ 1.06	≥ 30	≤ 0.42		
	≥ 1.2	5	≤ 1.06	≥ 30	≤ 0.55		
TPLX UC/FM/ST2-5	≥ 3.0	5	≤ 1.06	≥ 30	≤ 0.35	1-5/8" Unfl. / 1-5/8" Unfl.	180 (397)
	≥ 2.0	5	≤ 1.06	≥ 30	≤ 0.38		
TPLX UC/FM/ST3-5	≥ 2.0	5	≤ 1.06	≥ 30	≤ 0.43	1-5/8" Unfl. / 1-5/8" Unfl.	240 (529)
	≥ 1.6	5	≤ 1.06	≥ 30	≤ 0.47		
	≥ 1.2	5	≤ 1.06	≥ 30	≤ 0.60		
QPLX UC/FM/ST2-5	≥ 3.0	5	≤ 1.06	≥ 30	≤ 0.35	1-5/8" Unfl. / 3-1/8" Unfl.	230 (507)
	≥ 2.0	5	≤ 1.06	≥ 30	≤ 0.38		
QPLX UC/FM/ST3-5	≥ 2.0	5	≤ 1.06	≥ 30	≤ 0.43	1-5/8" Unfl. / 3-1/8" Unfl.	315 (694)
	≥ 1.6	5	≤ 1.06	≥ 30	≤ 0.47		
	≥ 1.2	5	≤ 1.06	≥ 30	≤ 0.60		

* different connectors upon request
** increased power on request

Specifications are subject to change without prior notice

FM STAR TYPE COMBINERS – 5kW

MECHANICAL LAYOUT

DPLX UC/FM/ST2 – 5

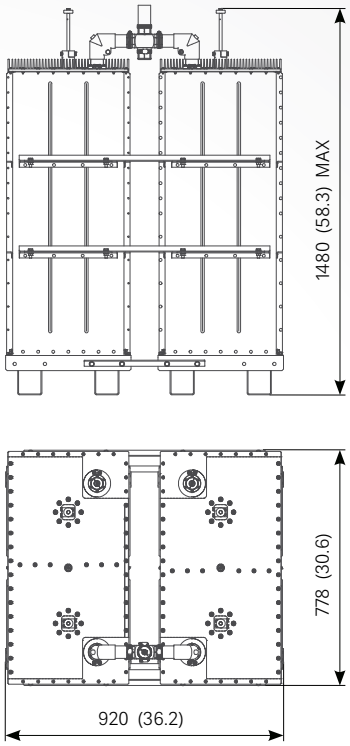

TPLX UC/FM/ST2 – 5

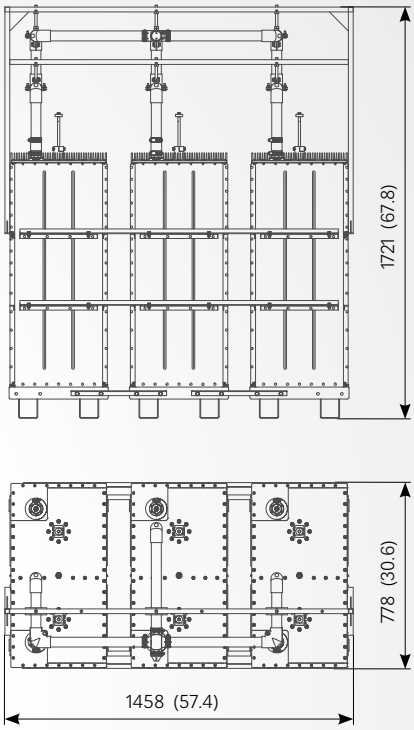

QPLX UC/FM/ST2 – 5

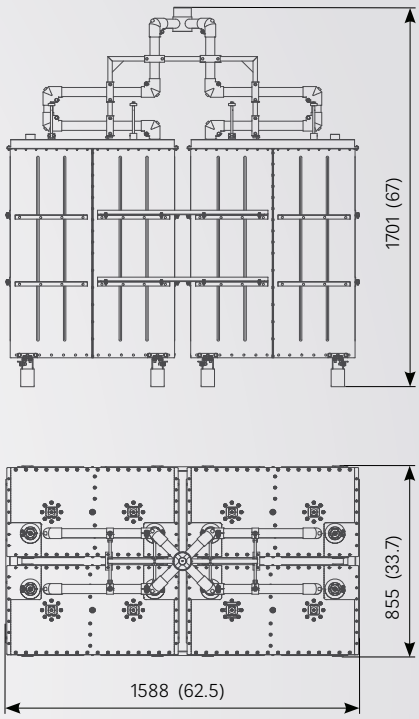

DPLX UC/FM/ST3 – 5

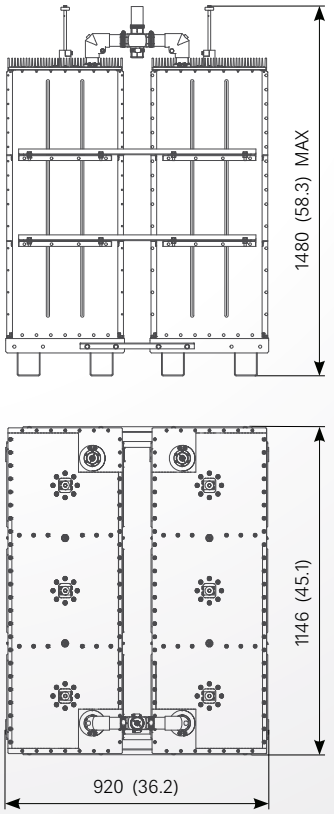

TPLX UC/FM/ST3 – 5

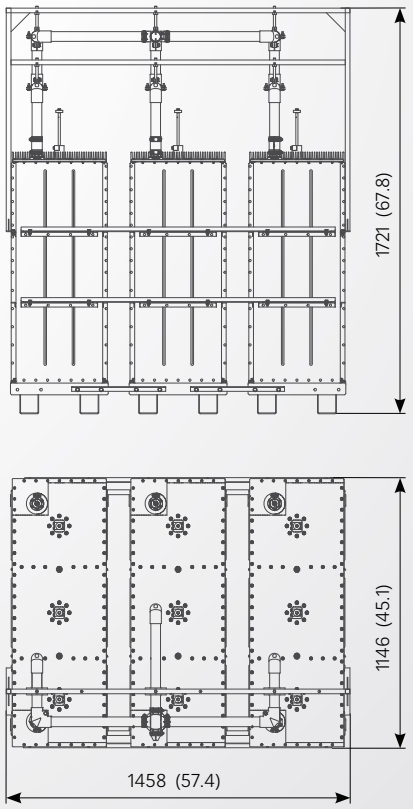

QPLX UC/FM/ST3 – 5

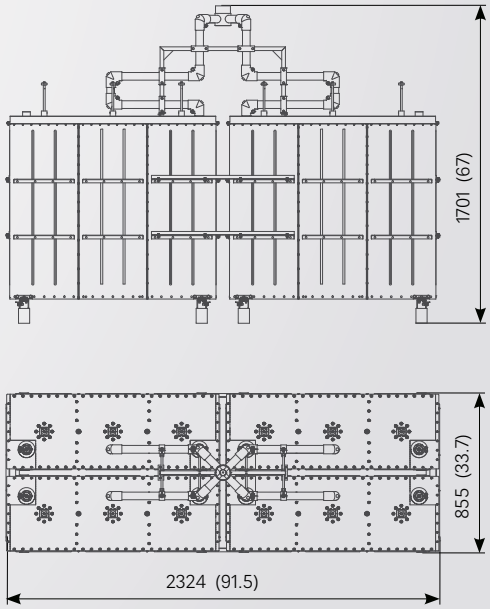

All dimensions are in millimeters (inches)

FM STAR TYPE COMBINERS – 10kW

FEATURES

- 2, 3 and 4 channel combiners
- 2 or 3 pole / 500 mm (19.7 in)
- temperature compensated
- adjustable selectivity

GENERAL FEATURES

FREQUENCY RANGE	87.5 ÷ 108 MHz
IMPEDANCE	50 ohm
VSWR	See table
MAX POWER	See table
CONNECTORS*	See table
WEIGHT	See table
OPERATING TEMPERATURE RANGE	-10 to + 45°C (+14 to +113°F)
OVER TEMPERATURE**	typical 30 K at max input power
ISOLATION	See table

* different connectors upon request
** referred to ambient temperature. Recommended: [AmbientTemp. + OverTemp.] ≤70°C (158°F)

ELECTRICAL AND MECHANICAL DATA

TYPE	FREQUENCIES SPACING (MHz)	MAX POWER** PER CHANNEL (kW)	V.SW.R INPUT at fo	ISOLATION BETWEEN FREQ. (dB)	INSERTION LOSSES at fo (dB)	CONNECTORS* INPUTS / OUTPUT	WEIGHT (approx) kg (lb)
DPLX UC/FM/ST2-10	≥ 3.0	10	≤ 1.06	≥ 30	≤ 0.23	1-5/8" Unfl. / 3-1/8" Unfl.	180 (397)
	≥ 2.0	10	≤ 1.06	≥ 30	≤ 0.25		
DPLX UC/FM/ST3-10	≥ 2.0	10	≤ 1.06	≥ 30	≤ 0.26	1-5/8" Unfl. / 3-1/8" Unfl.	250 (551)
	≥ 1.6	10	≤ 1.06	≥ 30	≤ 0.31		
	≥ 1.2	10	≤ 1.06	≥ 30	≤ 0.37		
TPLX UC/FM/ST2-10	≥ 3.0	10	≤ 1.06	≥ 30	≤ 0.28	1-5/8" Unfl. / 3-1/8" Unfl.	265 (584)
	≥ 2.0	10	≤ 1.06	≥ 30	≤ 0.30		
TPLX UC/FM/ST3-10	≥ 2.0	10	≤ 1.06	≥ 30	≤ 0.31	1-5/8" Unfl. / 3-1/8" Unfl.	385 (849)
	≥ 1.6	10	≤ 1.06	≥ 30	≤ 0.36		
	≥ 1.2	10	≤ 1.06	≥ 30	≤ 0.42		
QPLX UC/FM/ST2-10	≥ 3.0	10	≤ 1.06	≥ 30	≤ 0.28	1-5/8" Unfl. / 3-1/8" Unfl.	400 (882)
	≥ 2.0	10	≤ 1.06	≥ 30	≤ 0.30		
QPLX UC/FM/ST3-10	≥ 2.0	10	≤ 1.06	≥ 30	≤ 0.31	1-5/8" Unfl. / 3-1/8" Unfl.	530 (1168)
	≥ 1.6	10	≤ 1.06	≥ 30	≤ 0.36		
	≥ 1.2	10	≤ 1.06	≥ 30	≤ 0.42		

* different connectors upon request ** increased power on request

Specifications are subject to change without prior notice

FM STAR TYPE COMBINERS – 10kW

MECHANICAL LAYOUT

DPLX UC/FM/ST2 – 10

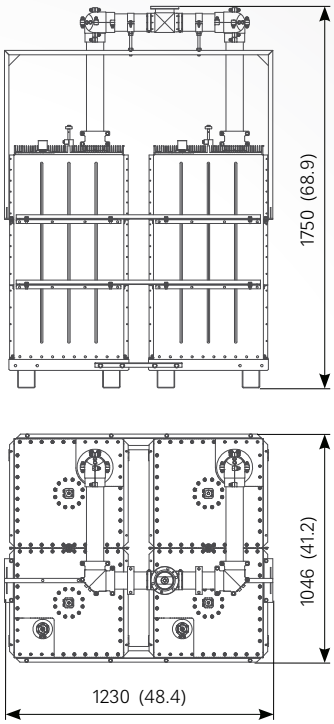

TPLX UC/FM/ST2 – 10

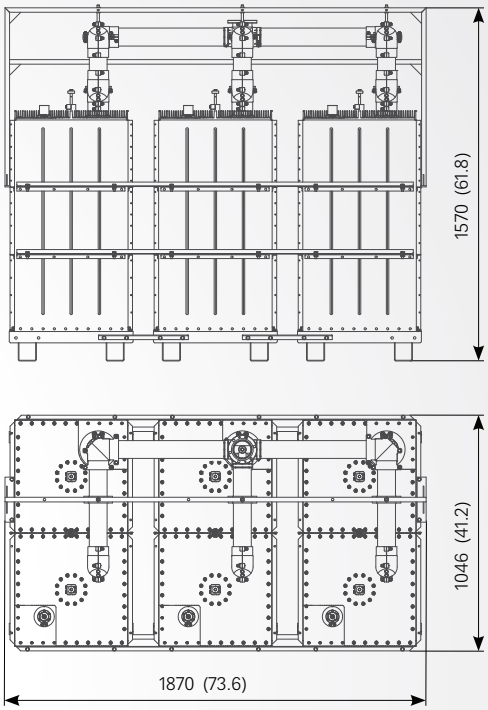

QPLX UC/FM/ST2 – 10

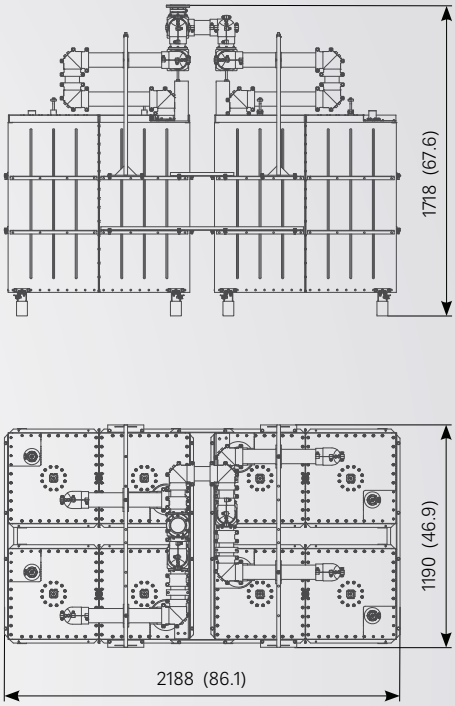

DPLX UC/FM/ST3 – 10

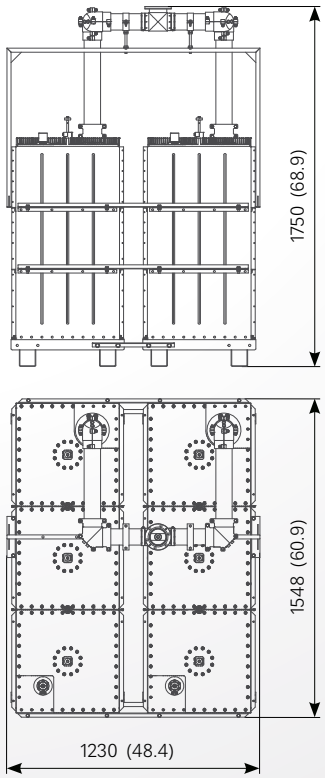

TPLX UC/FM/ST3 – 10

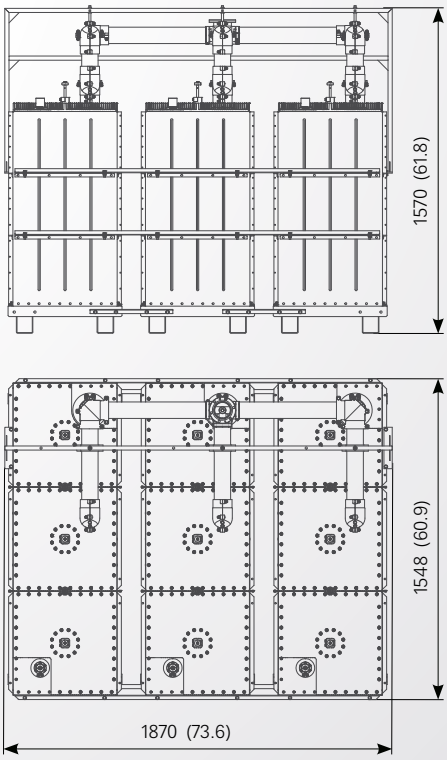

QPLX UC/FM/ST3 – 10

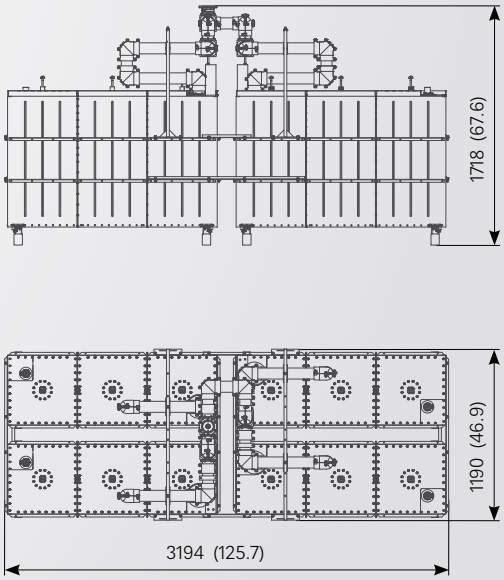

All dimensions are in millimeters (inches)

FM STAR TYPE COMBINERS – 20kW

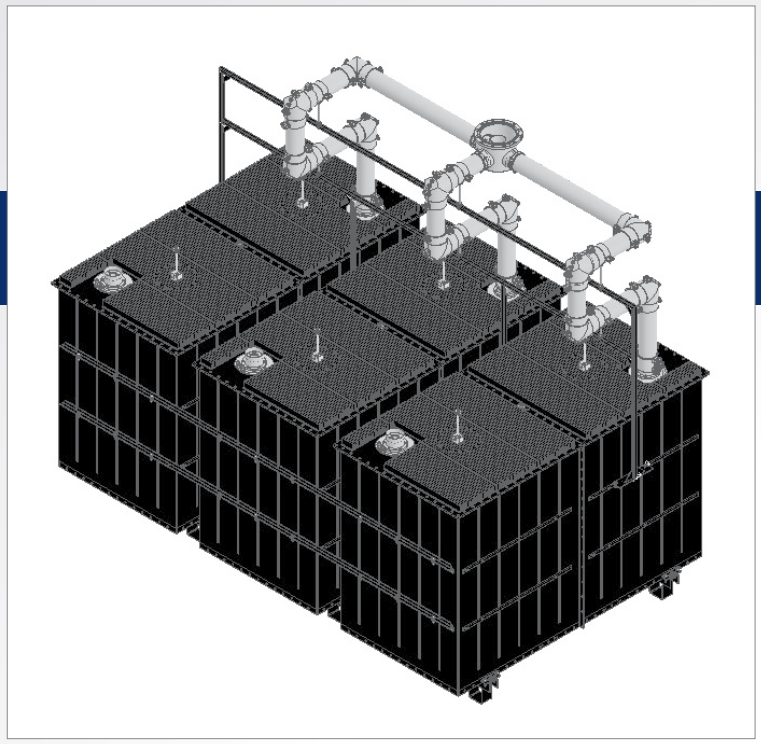

FEATURES

- 2 and 3 channel combiners
- 2 or 3 pole / 750 mm (29.5 in)
- temperature compensated
- adjustable selectivity

GENERAL FEATURES

FREQUENCY RANGE	87.5 ÷ 108 MHz
IMPEDANCE	50 ohm
VSWR	See table
MAX POWER	See table
CONNECTORS*	See table
WEIGHT	See table
OPERATING TEMPERATURE RANGE	-10 to + 45°C (+14 to +113°F)
OVER TEMPERATURE**	typical 30 K at max input power
ISOLATION	See table

* different connectors upon request
** referred to ambient temperature. Recommended: [AmbientTemp. + OverTemp.] ≤70°C (158°F)

ELECTRICAL AND MECHANICAL DATA

TYPE	FREQUENCIES SPACING (MHz)	MAX POWER** PER CHANNEL (kW)	V.SW.R INPUT at fo	ISOLATION BETWEEN FREQ. (dB)	INSERTION LOSSES at fo (dB)	CONNECTORS* INPUTS / OUTPUT	WEIGHT (approx) kg (lb)
DPLX UC/FM/ST2-20	≥ 3.0	20	≤ 1.06	≥ 30	≤ 0.19	3-1/8" Unfl. / 3-1/8" Unfl.	350 (772)
	≥ 2.0	20	≤ 1.06	≥ 30	≤ 0.21		
DPLX UC/FM/ST3-20	≥ 2.0	20	≤ 1.06	≥ 30	≤ 0.19	3-1/8" Unfl. / 3-1/8" Unfl.	500 (1102)
	≥ 1.6	20	≤ 1.06	≥ 30	≤ 0.22		
	≥ 1.2	20	≤ 1.06	≥ 30	≤ 0.27		
TPLX UC/FM/ST2-20	≥ 3.0	20	≤ 1.06	≥ 30	≤ 0.24	3-1/8" Unfl. / 6-1/8" Unfl.	400 (882)
	≥ 2.0	20	≤ 1.06	≥ 30	≤ 0.26		
TPLX UC/FM/ST3-20	≥ 2.0	20	≤ 1.06	≥ 30	≤ 0.24	3-1/8" Unfl. / 6-1/8" Unfl.	750 (1653)
	≥ 1.6	20	≤ 1.06	≥ 30	≤ 0.27		
	≥ 1.2	20	≤ 1.06	≥ 30	≤ 0.32		

* different connectors upon request
** increased power on request

Specifications are subject to change without prior notice

FM STAR TYPE COMBINERS – 20kW

MECHANICAL LAYOUT

DPLX UC/FM/ST2 – 20

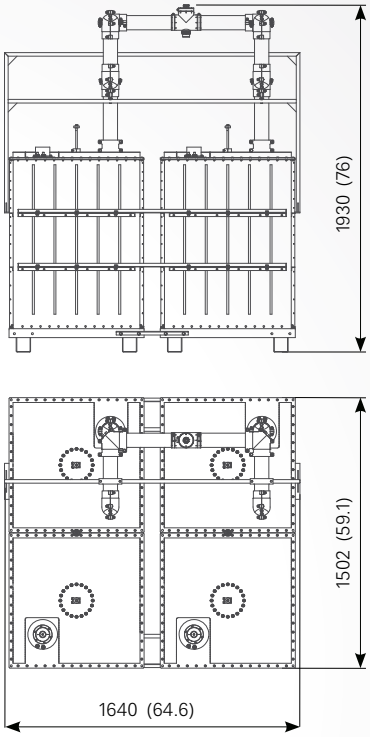

TPLX UC/FM/ST2 – 20

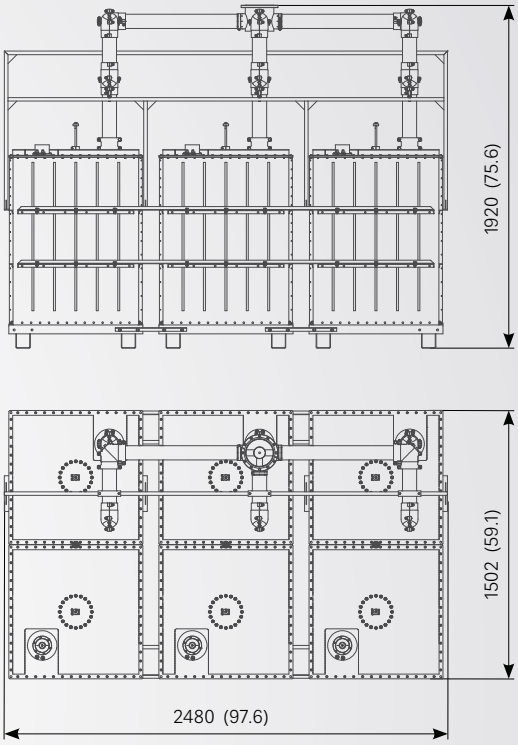

DPLX UC/FM/ST3 – 20

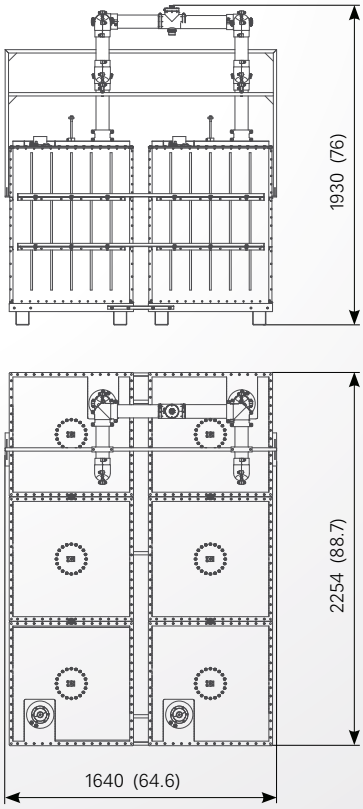

TPLX UC/FM/ST3 – 20

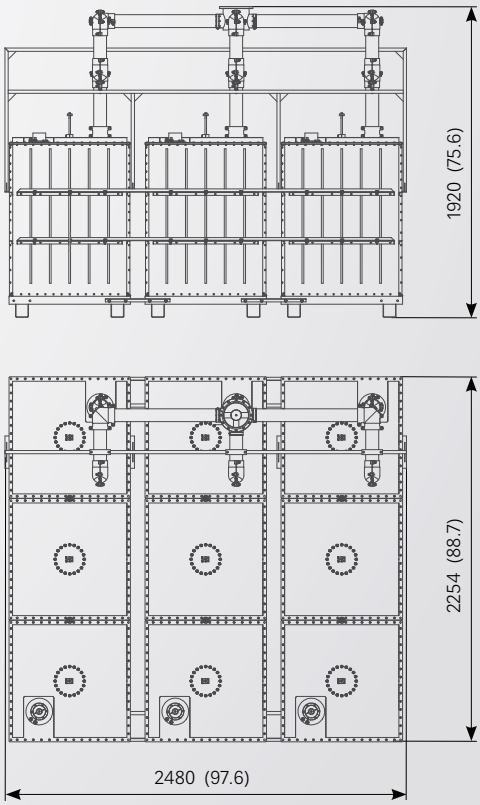

All dimensions are in millimeters (inches)

UC/FM/LB2-0.4

FM DIRECTIONAL FILTER TYPE COMBINER

FEATURES

- FM double bridge channel combiner
- 2 pole / 85 mm (3.3 in)
- adjustable selectivity
- temperature compensated
- available rack mounting solution

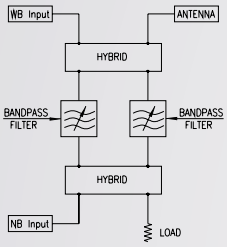

ELECTRICAL AND MECHANICAL DATA

COMBINER TYPE	UC/FM/LB2-0.4	
FREQUENCY RANGE		
- wideband input	87.5 ÷ 108 MHz	
- narrowband input	Tunable over entire FM range	
INPUTS AND OUTPUT IMPEDANCE	50 ohm	
RETURN LOSS		
- wideband input	≥ 26 dB	
- narrowband input (at carrier fo)	≥ 28 dB	
INSERTION LOSS (at carrier fo)		
NB input with freq. spacing ±2.0 MHz	≤ 0.80 dB	
NB input with freq. spacing ±1.6 MHz	≤ 0.93 dB	
WB input	≤ 0.15 dB	
ISOLATION (at carrier fo)		
- Narrowband input to wideband input	≥ 30 dB	
- Wideband input to narrowband input	≥ 50 dB	
GROUP DELAY	≤ 25 ns at fo ±100 kHz	
(With 1.6 MHz frequency spacing)	≤ 50 ns at fo ±150 kHz	
MAX POWER RATINGS / freq. spacing (MHz)	±2.0	±1.6
- Narrowband input	0.4 kW	0.4 kW
- Wideband input	1 kW	1 kW
- Total output	1 kW	1 kW
OPERATING TEMPERATURE RANGE	-10 to + 45°C (+14 to +113°F)	
OVER TEMPERATURE*	typical 30 K at max NB input power	
INPUT PORTS		
- Narrowband input	NF	
- Wideband input	7/16 F	
OUTPUT PORT	7/16 F	
WEIGHT (approx)	18 kg (40 lb)	

* referred to ambient temperature. Recommended: [AmbientTemp. + OverTemp.] ≤70°C (158°F)

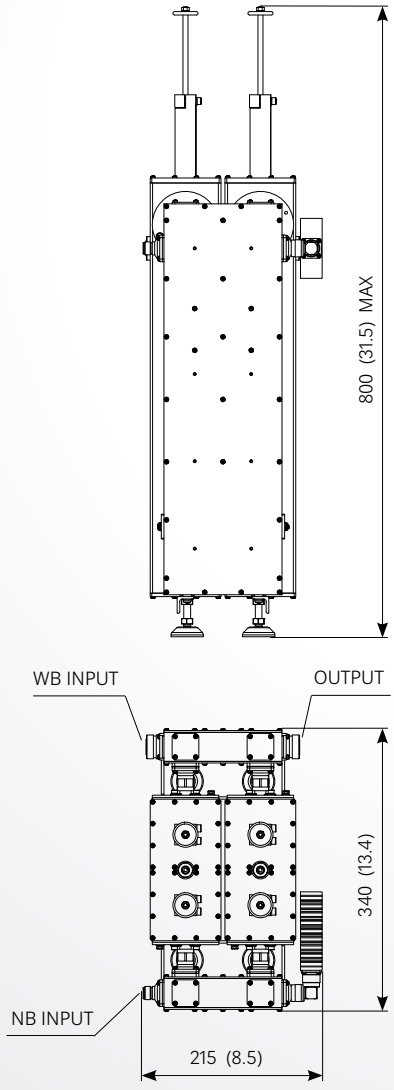

All dimensions are in millimeters (inches)

Specifications are subject to change without prior notice

by KATHREIN SIRA RADIO SYSTEMS

UC/FM/LB3-0.4

FM DIRECTIONAL FILTER TYPE COMBINER

FEATURES

- FM double bridge channel combiner
- 3 pole / 85 mm (3.3 in)
- adjustable selectivity
- temperature compensated
- available rack mounting solution

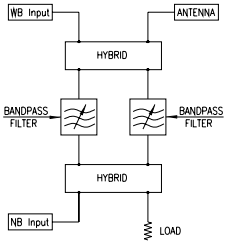

ELECTRICAL AND MECHANICAL DATA

COMBINER TYPE	UC/FM/LB3-0.4		
FREQUENCY RANGE			
- wideband input	87.5 ÷ 108 MHz		
- narrowband input	Tunable over entire FM range		
INPUTS AND OUTPUT IMPEDANCE	50 ohm		
RETURN LOSS			
- wideband input	≥ 26 dB		
- narrowband input (at carrier fo)	≥ 28 dB		
INSERTION LOSS (at carrier fo)			
NB input with freq. spacing ±1.4 MHz	≤ 1.05 dB		
NB input with freq. spacing ±1.2 MHz	≤ 1.18 dB		
NB input with freq. spacing ±0.8 MHz	≤ 1.60 dB		
WB input	≤ 0.10 dB		
WB input with freq. spacing ±0.8 MHz	≤ 0.40 dB		
ISOLATION (at carrier fo)			
- Narrowband input to wideband input	≥ 30 dB		
- Wideband input to narrowband input	≥ 50 dB		
GROUP DELAY	≤ 40 ns at fo ±100 kHz		
(With 0.8 MHz frequency spacing)	≤ 80 ns at fo ±150 kHz		
MAX POWER RATINGS / freq. spacing (MHz)	±1.4	±1.2	±0.8
- Narrowband input	0.4 kW	0.4 kW	0.4 kW
- Wideband input	1 kW	1 kW	1 kW
- Total output	1 kW	1 kW	1 kW
OPERATING TEMPERATURE RANGE	-10 to + 45°C (+14 to +113°F)		
OVER TEMPERATURE*	typical 30 K at max NB input power		
INPUT PORTS			
- Narrowband input	NF		
- Wideband input	7/16 F		
OUTPUT PORT	7/16 F		
WEIGHT (approx)	23 kg (51 lb)		

* referred to ambient temperature. Recommended: [AmbientTemp. + OverTemp.] ≤70°C (158°F)

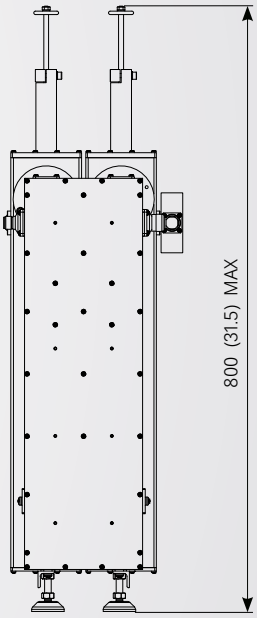

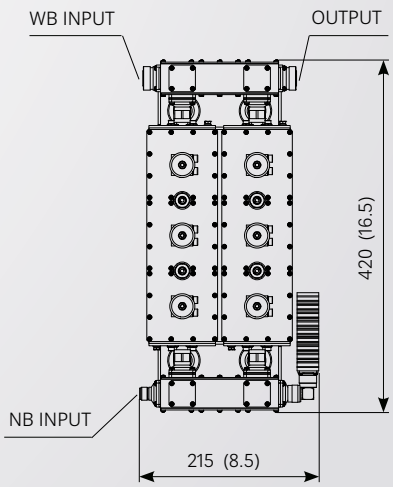

All dimensions are in millimeters (inches)

UC/FM/LB2-1.2

FM DIRECTIONAL FILTER TYPE COMBINER

FEATURES

- FM double bridge channel combiner
- 2 pole / 150 mm (5.9 in)
- adjustable selectivity
- temperature compensated

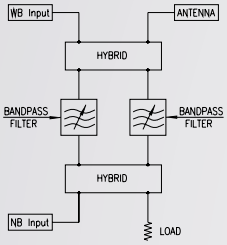

ELECTRICAL AND MECHANICAL DATA

COMBINER TYPE	UC/FM/LB2-1.2	
FREQUENCY RANGE		
- wideband input	87.5 ÷ 108 MHz	
- narrowband input	Tunable over entire FM range	
INPUTS AND OUTPUT IMPEDANCE	50 ohm	
RETURN LOSS		
- wideband input	≥ 26 dB	
- narrowband input (at carrier fo)	≥ 28 dB	
INSERTION LOSS (at carrier fo)		
NB input with freq. spacing ±2.0 MHz	≤ 0.58 dB	
NB input with freq. spacing ±1.6 MHz	≤ 0.68 dB	
WB input	≤ 0.10 dB	
ISOLATION (at carrier fo)		
- Narrowband input to wideband input	≥ 30 dB	
- Wideband input to narrowband input	≥ 50 dB	
GROUP DELAY	≤ 25 ns at fo ±100 kHz	
(With 1.6 MHz frequency spacing)	≤ 50 ns at fo ±150 kHz	
MAX POWER RATINGS / freq. spacing (MHz)	±2.0	±1.6
- Narrowband input	1.2 kW	1.2 kW
- Wideband input	3 kW	3 kW
- Total output	3 kW	3 kW
OPERATING TEMPERATURE RANGE	-10 to + 45°C (+14 to +113°F)	
OVER TEMPERATURE*	typical 30 K at max NB input power	
INPUT PORTS		
- Narrowband input	7/16 F	
- Wideband input	7/16 F	
OUTPUT PORT	7/16 F	
WEIGHT (approx)	36 kg (79 lb)	

* referred to ambient temperature. Recommended: [AmbientTemp. + OverTemp.] ≤70°C (158°F)

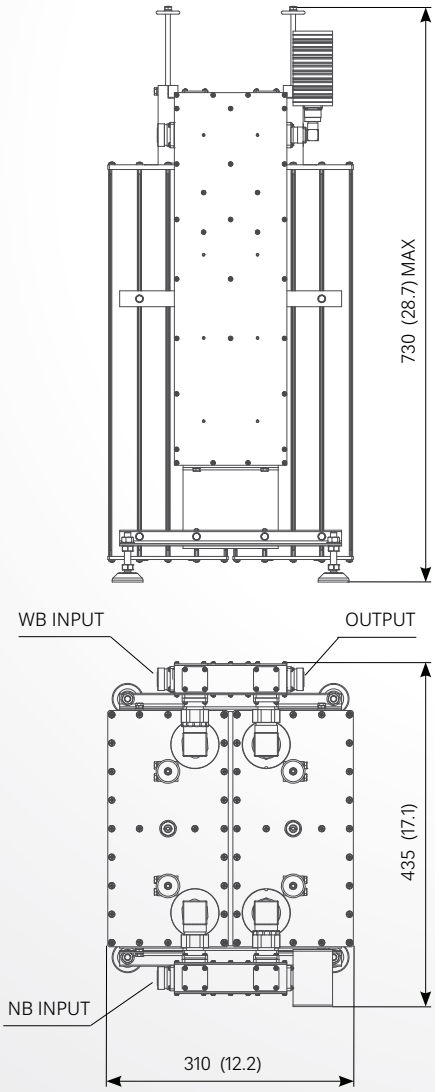

All dimensions are in millimeters (inches)

Specifications are subject to change without prior notice

by KATHREIN SIRA RADIO SYSTEMS

UC/FM/LB3-1.2

FM DIRECTIONAL FILTER TYPE COMBINER

FEATURES

- FM double bridge channel combiner
- 3 pole / 150 mm (5.9 in)
- adjustable selectivity
- temperature compensated

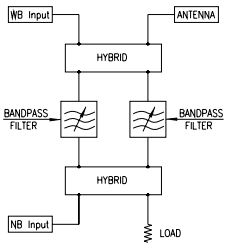

ELECTRICAL AND MECHANICAL DATA

COMBINER TYPE	UC/FM/LB3-1.2		
FREQUENCY RANGE			
- wideband input	87.5 ÷ 108 MHz		
- narrowband input	Tunable over entire FM range		
INPUTS AND OUTPUT IMPEDANCE	50 ohm		
RETURN LOSS			
- wideband input	≥ 26 dB		
- narrowband input (at carrier fo)	≥ 28 dB		
INSERTION LOSS (at carrier fo)			
NB input with freq. spacing ±1.6 MHz	≤ 0.66 dB		
NB input with freq. spacing ±1.2 MHz	≤ 0.82 dB		
NB input with freq. spacing ±0.8 MHz	≤ 1.10 dB		
WB input	≤ 0.10 dB		
WB input with freq. spacing ±0.8 MHz	≤ 0.35 dB		
ISOLATION (at carrier fo)			
- Narrowband input to wideband input	≥ 30 dB		
- Wideband input to narrowband input	≥ 50 dB		
GROUP DELAY	≤ 40 ns at fo ±100 kHz		
(With 0.8 MHz frequency spacing)	≤ 80 ns at fo ±150 kHz		
MAX POWER RATINGS / freq. spacing (MHz)	±1.6	±1.2	±0.8
- Narrowband input	1.2 kW	1.2 kW	1.2 kW
- Wideband input	3 kW	3 kW	3 kW
- Total output	3 kW	3 kW	3 kW
OPERATING TEMPERATURE RANGE	-10 to + 45°C (+14 to +113°F)		
OVER TEMPERATURE*	typical 30 K at max NB input power		
INPUT PORTS			
- Narrowband input	7/16 F		
- Wideband input	7/16 F		
OUTPUT PORT	7/16 F		
WEIGHT (approx)	52 kg (115 lb)		

* referred to ambient temperature. Recommended: [AmbientTemp. + OverTemp.] ≤70°C (158°F)

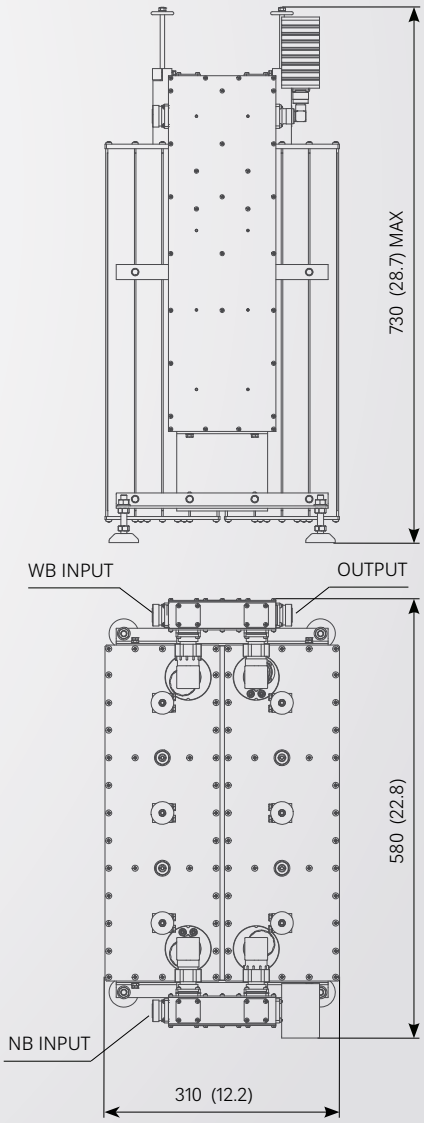

All dimensions are in millimeters (inches)

UC/FM/LB4-1.2

FM DIRECTIONAL FILTER TYPE COMBINER

FEATURES

- FM double bridge channel combiner
- 4 pole / 150 mm (5.9 in)
- adjustable selectivity
- temperature compensated

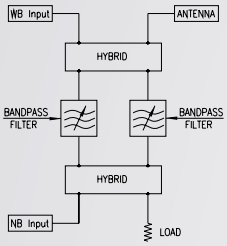

ELECTRICAL AND MECHANICAL DATA

COMBINER TYPE	UC/FM/LB4-1.2			
FREQUENCY RANGE				
- wideband input	87.5 ÷ 108 MHz			
- narrowband input	Tunable over entire FM range			
INPUTS AND OUTPUT IMPEDANCE	50 ohm			
RETURN LOSS				
- wideband input	≥ 26 dB			
- narrowband input (at carrier fo)	≥ 28 dB			
INSERTION LOSS (at carrier fo)				
NB input with freq. spacing ±1.2 MHz	≤ 0.98 dB			
NB input with freq. spacing ±1.0 MHz	≤ 1.08 dB			
NB input with freq. spacing ±0.8 MHz	≤ 1.28 dB			
NB input with freq. spacing ±0.6 MHz	≤ 1.60 dB			
WB input	≤ 0.10 dB			
WB input with freq. spacing ±0.6 MHz	≤ 0.45 dB			
ISOLATION (at carrier fo)				
- Narrowband input to wideband input	≥ 30 dB			
- Wideband input to narrowband input	≥ 50 dB			
GROUP DELAY	≤ 50 ns at fo ±100 kHz			
(With 0.8 MHz frequency spacing)	≤ 100 ns at fo ±150 kHz			
MAX POWER RATINGS / freq. spacing (MHz)	±1.2	±1.0	±0.8	±0.6
- Narrowband input	1.2 kW	1.2 kW	1.2 kW	1.2 kW
- Wideband input	3 kW	3 kW	3 kW	3 kW
- Total output	3 kW	3 kW	3 kW	3 kW
OPERATING TEMPERATURE RANGE	-10 to + 45°C (+14 to +113°F)			
OVER TEMPERATURE*	typical 30 K at max NB input power			
INPUT PORTS				
- Narrowband input	7/16 F			
- Wideband input	7/16 F			
OUTPUT PORT	7/16 F			
WEIGHT (approx)	60 kg (132 lb)			

* referred to ambient temperature. Recommended: [AmbientTemp. + OverTemp.] ≤70°C (158°F)

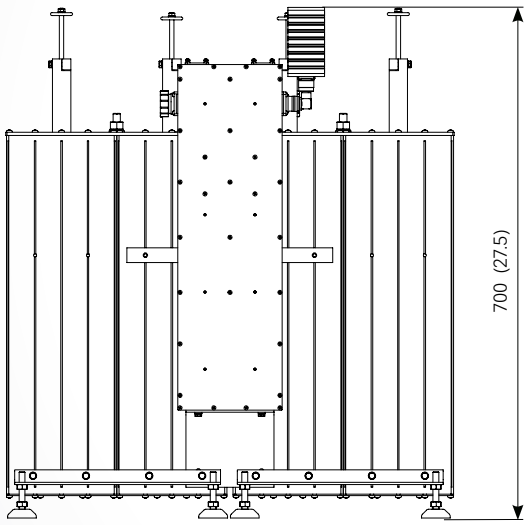

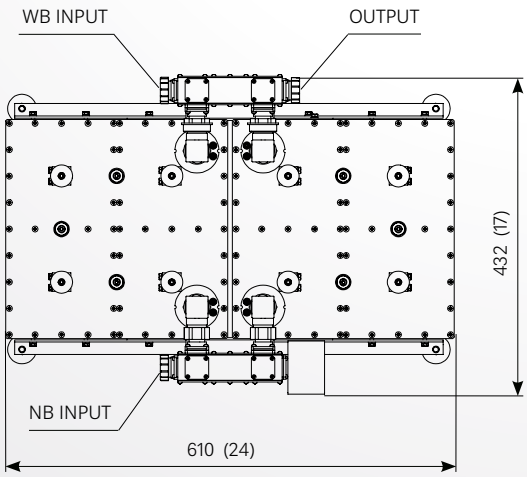

All dimensions are in millimeters (inches)

Specifications are subject to change without prior notice

by KATHREIN SIRA RADIO SYSTEMS

UC/FM/LB2-2

FM DIRECTIONAL FILTER TYPE COMBINER

FEATURES

- FM double bridge channel combiner
- 2 pole / 150 mm (5.9 in)
- adjustable selectivity
- temperature compensated

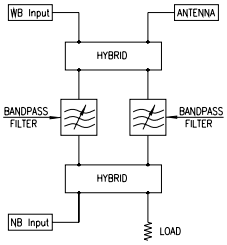

ELECTRICAL AND MECHANICAL DATA

COMBINER TYPE	UC/FM/LB2-2	
FREQUENCY RANGE		
- wideband input	87.5 ÷ 108 MHz	
- narrowband input	Tunable over entire FM range	
INPUTS AND OUTPUT IMPEDANCE	50 ohm	
RETURN LOSS		
- wideband input	≥ 26 dB	
- narrowband input (at carrier fo)	≥ 28 dB	
INSERTION LOSS (at carrier fo)		
NB input with freq. spacing ±2.0 MHz	≤ 0.50 dB	
NB input with freq. spacing ±1.6 MHz	≤ 0.58 dB	
WB input	≤ 0.10 dB	
ISOLATION (at carrier fo)		
- Narrowband input to wideband input	≥ 32 dB	
- Wideband input to narrowband input	≥ 50 dB	
GROUP DELAY	≤ 25 ns at fo ±100 kHz	
(With 1.6 MHz frequency spacing)	≤ 50 ns at fo ±150 kHz	
MAX POWER RATINGS / freq. spacing (MHz)	±2.0	±1.6
- Narrowband input	2.4 kW	2.4 kW
- Wideband input	5 kW	5 kW
- Total output	5 kW	5 kW
OPERATING TEMPERATURE RANGE	-10 to + 45°C (+14 to +113°F)	
OVER TEMPERATURE*	typical 30 K at max NB input power	
INPUT PORTS		
- Narrowband input	7/8" EIA	
- Wideband input	7/8" EIA	
OUTPUT PORT	7/8" EIA	
WEIGHT (approx)	35 kg (77 lb)	

* referred to ambient temperature. Recommended: [AmbientTemp. + OverTemp.] ≤70°C (158°F)

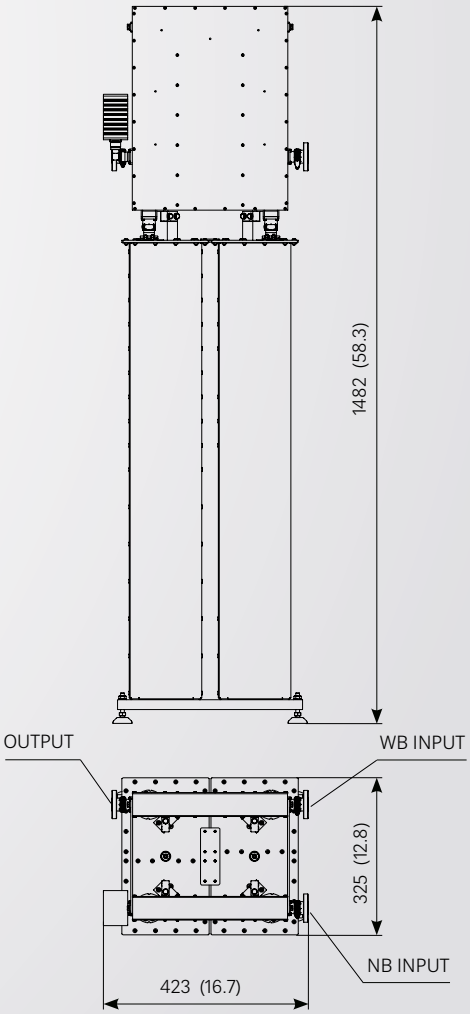

All dimensions are in millimeters (inches)

UC/FM/LB3-2

FM DIRECTIONAL FILTER TYPE COMBINER

FEATURES

- FM double bridge channel combiner
- 3 pole / 150 mm (5.9 in)
- adjustable selectivity
- temperature compensated

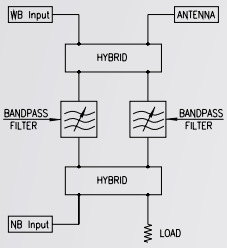

ELECTRICAL AND MECHANICAL DATA

COMBINER TYPE	UC/FM/LB3-2		
FREQUENCY RANGE			
- wideband input	87.5 ÷ 108 MHz		
- narrowband input	Tunable over entire FM range		
INPUTS AND OUTPUT IMPEDANCE	50 ohm		
RETURN LOSS			
- wideband input	≥ 26 dB		
- narrowband input (at carrier fo)	≥ 28 dB		
INSERTION LOSS (at carrier fo)			
NB input with freq. spacing ±1.6 MHz	≤ 0.55 dB		
NB input with freq. spacing ±1.2 MHz	≤ 0.68 dB		
NB input with freq. spacing ±0.8 MHz	≤ 0.92 dB		
WB input	≤ 0.10 dB		
WB input with freq. spacing ±0.8 MHz	≤ 0.20 dB		
ISOLATION (at carrier fo)			
- Narrowband input to wideband input	≥ 32 dB		
- Wideband input to narrowband input	≥ 50 dB		
GROUP DELAY	≤ 40 ns at fo ±100 kHz		
(With 0.8 MHz frequency spacing)	≤ 80 ns at fo ±150 kHz		
MAX POWER RATINGS / freq. spacing (MHz)	±1.6	±1.2	±0.8
- Narrowband input	2.4 kW	2.4 kW	1.6 kW
- Wideband input	5 kW	5 kW	5 kW
- Total output	5 kW	5 kW	5 kW
OPERATING TEMPERATURE RANGE	-10 to + 45°C (+14 to +113°F)		
OVER TEMPERATURE*	typical 30 K at max NB input power		
INPUT PORTS			
- Narrowband input	7/8" EIA		
- Wideband input	7/8" EIA		
OUTPUT PORT	7/8" EIA		
WEIGHT (approx)	44 kg (97 lb)		

* referred to ambient temperature. Recommended: [AmbientTemp. + OverTemp.] ≤70°C (158°F)

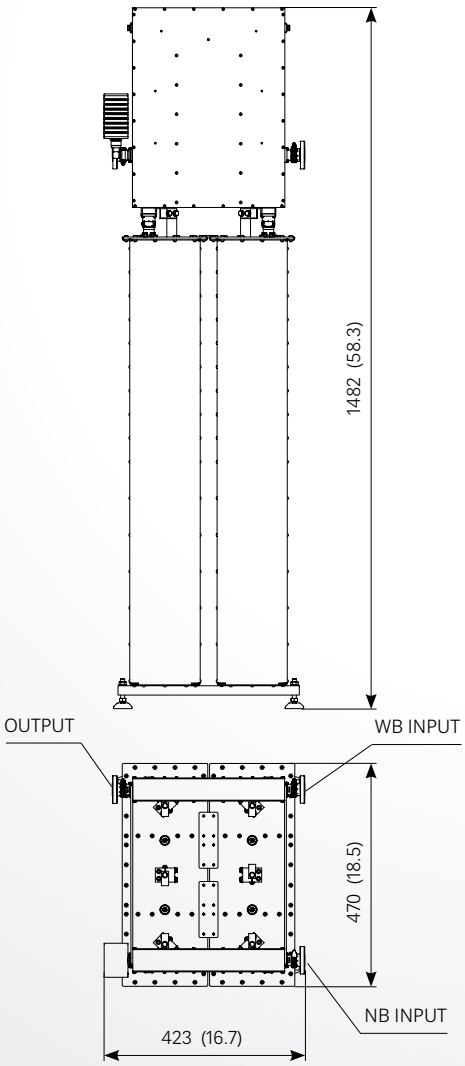

All dimensions are in millimeters (inches)

Specifications are subject to change without prior notice

UC/FM/LB4-2

FM DIRECTIONAL FILTER TYPE COMBINER

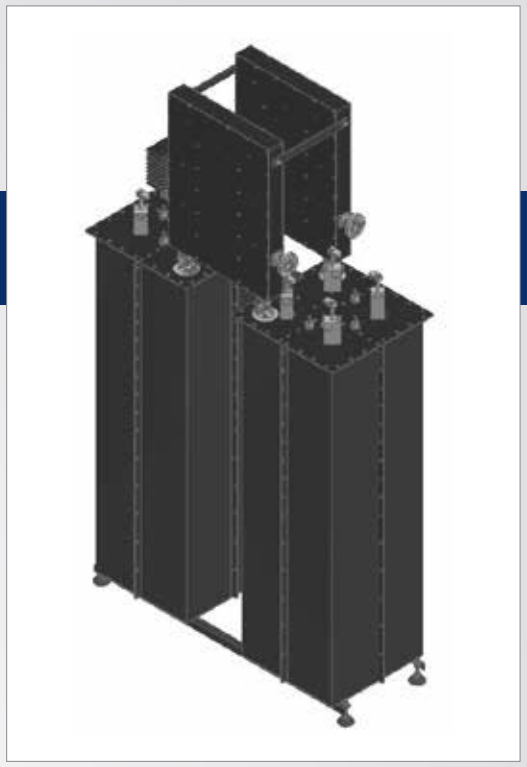

FEATURES

- FM double bridge channel combiner
- 4 pole / 150 mm (5.9 in)
- adjustable selectivity
- temperature compensated

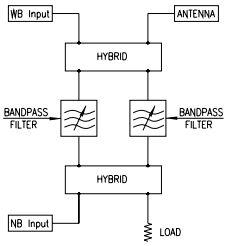

ELECTRICAL AND MECHANICAL DATA

COMBINER TYPE	UC/FM/LB4-2			
FREQUENCY RANGE				
- wideband input	87.5 ÷ 108 MHz			
- narrowband input	Tunable over entire FM range			
INPUTS AND OUTPUT IMPEDANCE	50 ohm			
RETURN LOSS				
- wideband input	≥ 26 dB			
- narrowband input (at carrier fo)	≥ 28 dB			
INSERTION LOSS (at carrier fo)				
NB input with freq. spacing ±1.2 MHz	≤ 0.75 dB			
NB input with freq. spacing ±1.0 MHz	≤ 0.85 dB			
NB input with freq. spacing ±0.8 MHz	≤ 0.99 dB			
NB input with freq. spacing ±0.6 MHz	≤ 1.22 dB			
WB input	≤ 0.10 dB			
WB input with freq. spacing ±0.6 MHz	≤ 0.35 dB			
ISOLATION (at carrier fo)				
- Narrowband input to wideband input	≥ 32 dB			
- Wideband input to narrowband input	≥ 50 dB			
GROUP DELAY	≤ 50 ns at fo ±100 kHz			
(With 0.8 MHz frequency spacing)	≤ 100 ns at fo ±150 kHz			
MAX POWER RATINGS / freq. spacing (MHz)	±1.2	±1.0	±0.8	±0.6
- Narrowband input	2.4 kW	2 kW	1.6 kW	1.2 kW
- Wideband input	5 kW	5 kW	5 kW	5 kW
- Total output	5 kW	5 kW	5 kW	5 kW
OPERATING TEMPERATURE RANGE	-10 to + 45°C (+14 to +113°F)			
OVER TEMPERATURE*	typical 30 K at max NB input power			
INPUT PORTS				
- Narrowband input	7/8" EIA			
- Wideband input	7/8" EIA			
OUTPUT PORT	7/8" EIA			
WEIGHT (approx)	55 kg (121 lb)			

* referred to ambient temperature. Recommended: [AmbientTemp. + OverTemp.] ≤70°C (158°F)

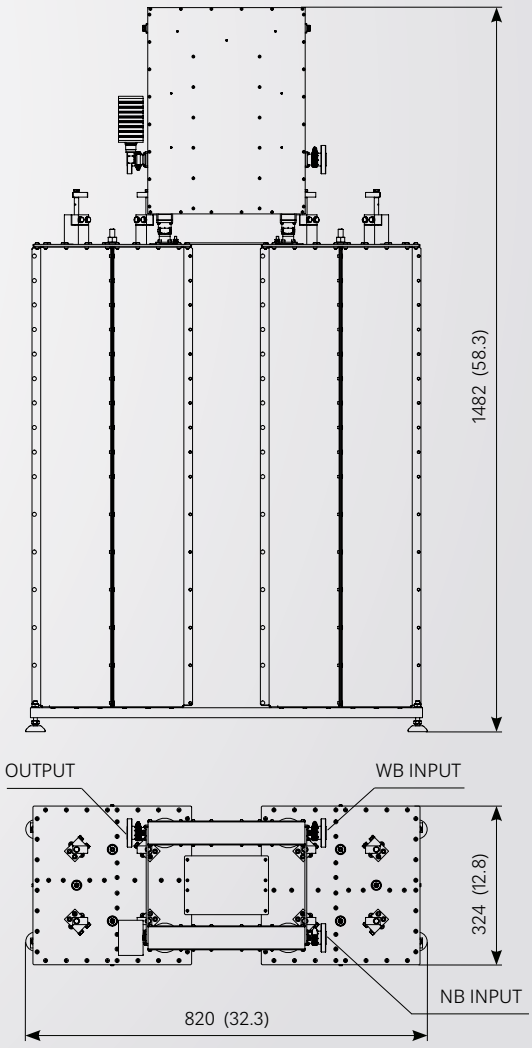

All dimensions are in millimeters (inches)

UC/FM/LB6ELL-2.4

FM DIRECTIONAL FILTER TYPE COMBINER

FEATURES

- FM double bridge channel combiner
- 6 pole / 200 mm (7.9 in)
- adjustable selectivity
- temperature compensated
- elliptical response

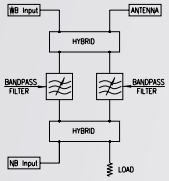

ELECTRICAL AND MECHANICAL DATA

COMBINER TYPE	UC/FM/LB6ELL-2.4	
FREQUENCY RANGE		
- wideband input	87.5 ÷ 108 MHz	
- narrowband input	Tunable over entire FM range	
INPUTS AND OUTPUT IMPEDANCE	50 ohm	
RETURN LOSS		
- wideband input	≥ 23 dB	
- narrowband input (at carrier fo)	≥ 28 dB	
INSERTION LOSS (at carrier fo)		
NB input with freq. spacing ±0.3 MHz	≤ 2.25 dB	
NB input with freq. spacing ±0.4 MHz	≤ 1.75 dB	
WB input	≤ 0.18 dB	
WB input with freq. spacing ±0.3 MHz	≤ 0.45 dB	
WB input with freq. spacing ±0.4 MHz	≤ 0.35 dB	
ISOLATION (at carrier fo)		
- Narrowband input to wideband input	≥ 30 dB	
- Wideband input to narrowband input	≥ 50 dB	
GROUP DELAY		
NB input (typical, 0.3 MHz frequency spacing)	≤ 3.20 µs at fo ±150 kHz	
MAX POWER RATINGS / freq. spacing (MHz)	±0.3	±0.4
- Narrowband input	2.0 kW	2.4 kW
- Wideband input**	15 kW**	15 kW**
- Total output	15 kW	15 kW
OPERATING TEMPERATURE RANGE	-10 to + 45°C (+14 to +113°F)	
OVER TEMPERATURE*	typical 30 K at max NB input power	
INPUT PORTS		
- Narrowband input	7/8" EIA	
- Wideband input	1-5/8" Unfl.	
OUTPUT PORT	1-5/8" Unfl.	
WEIGHT (approx)	135 kg (298 lb)	

* referred to ambient temperature. Recommended: [AmbientTemp. + OverTemp.] ≤70°C (158°F)
** if frequency (ies) at the WB input are at the minimum spacing, the sum of [WB+NB] input power ≤NB input power

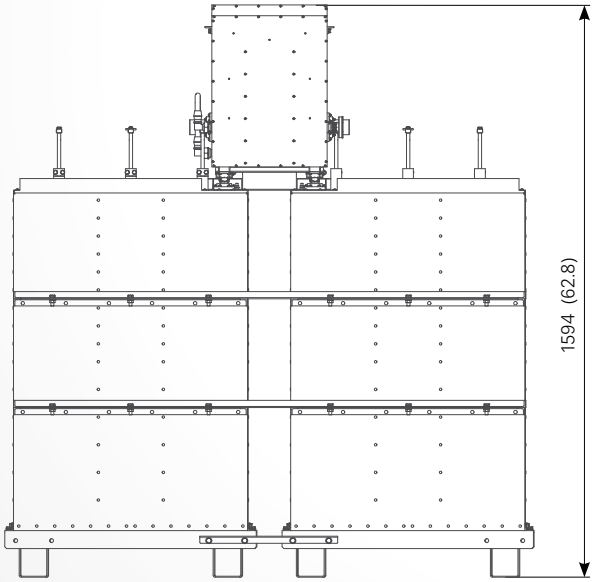

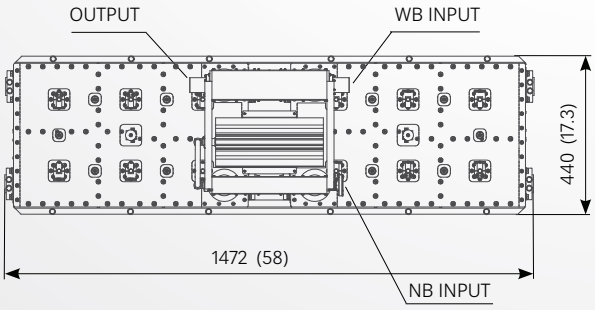

All dimensions are in millimeters (inches)

Specifications are subject to change without prior notice

by NAUTEL SIRA RADIO SYSTEMS

UC/FM/LB2-4

FM DIRECTIONAL FILTER TYPE COMBINER

FEATURES

- FM double bridge channel combiner
- 2 pole / 150 mm (5.9 in)
- adjustable selectivity
- temperature compensated

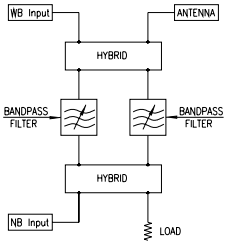

ELECTRICAL AND MECHANICAL DATA

COMBINER TYPE	UC/FM/LB2-4	
FREQUENCY RANGE		
- wideband input	87.5 ÷ 108 MHz	
- narrowband input	Tunable over entire FM range	
INPUTS AND OUTPUT IMPEDANCE	50 ohm	
RETURN LOSS		
- wideband input	≥ 26 dB	
- narrowband input (at carrier fo)	≥ 28 dB	
INSERTION LOSS (at carrier fo)		
NB input with freq. spacing ±2.0 MHz	≤ 0.50 dB	
NB input with freq. spacing ±1.6 MHz	≤ 0.58 dB	
WB input	≤ 0.10 dB	
ISOLATION (at carrier fo)		
- Narrowband input to wideband input	≥ 32 dB	
- Wideband input to narrowband input	≥ 50 dB	
GROUP DELAY	≤ 25 ns at fo ±100 kHz	
(With 1.6 MHz frequency spacing)	≤ 50 ns at fo ±150 kHz	
MAX POWER RATINGS / freq. spacing (MHz)	±2.0	±1.6
- Narrowband input	4 kW	3 kW
- Wideband input	6 kW	6 kW
- Total output	6 kW	6 kW
OPERATING TEMPERATURE RANGE	-10 to + 45°C (+14 to +113°F)	
OVER TEMPERATURE*	typical 30 K at max NB input power	
INPUT PORTS		
- Narrowband input	7/8" EIA	
- Wideband input	7/8" EIA	
OUTPUT PORT	7/8" EIA	
WEIGHT (approx)	40 kg (88 lb)	

* referred to ambient temperature. Recommended: [AmbientTemp. + OverTemp.] ≤70°C (158°F)

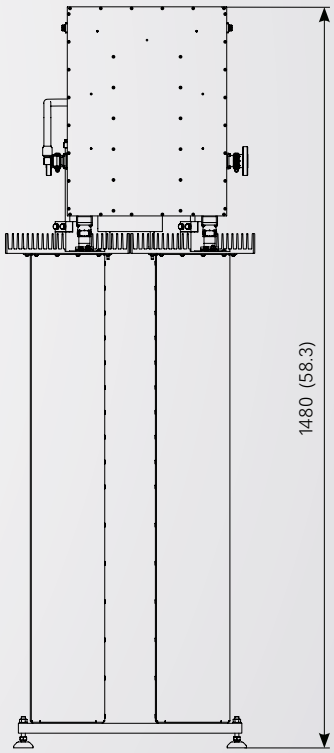

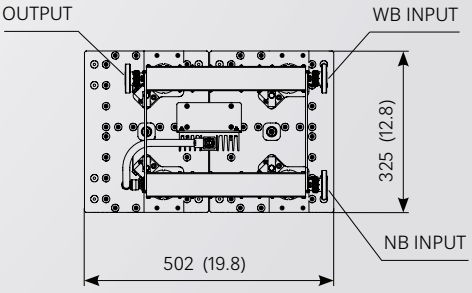

All dimensions are in millimeters (inches)

UC/FM/LB3-4

FM DIRECTIONAL FILTER TYPE COMBINER

FEATURES

- FM double bridge channel combiner
- 3 pole / 150 mm (5.9 in)
- adjustable selectivity
- temperature compensated

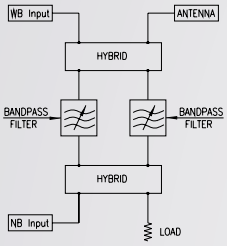

ELECTRICAL AND MECHANICAL DATA

COMBINER TYPE	UC/FM/LB3-4		
FREQUENCY RANGE			
- wideband input	87.5 ÷ 108 MHz		
- narrowband input	Tunable over entire FM range		
INPUTS AND OUTPUT IMPEDANCE	50 ohm		
RETURN LOSS			
- wideband input	≥ 26 dB		
- narrowband input (at carrier fo)	≥ 28 dB		
INSERTION LOSS (at carrier fo)			
NB input with freq. spacing ±1.6 MHz	≤ 0.55 dB		
NB input with freq. spacing ±1.2 MHz	≤ 0.68 dB		
NB input with freq. spacing ±0.8 MHz	≤ 0.92 dB		
WB input	≤ 0.10 dB		
WB input with freq. spacing ±0.8 MHz	≤ 0.20 dB		
ISOLATION (at carrier fo)			
- Narrowband input to wideband input	≥ 32 dB		
- Wideband input to narrowband input	≥ 50 dB		
GROUP DELAY	≤ 40 ns at fo ±100 kHz		
(With 0.8 MHz frequency spacing)	≤ 80 ns at fo ±150 kHz		
MAX POWER RATINGS / freq. spacing (MHz)	±1.6	±1.2	±0.8
- Narrowband input	4 kW	3 kW	2.4 kW
- Wideband input	6 kW	6 kW	6 kW
- Total output	6 kW	6 kW	6 kW
OPERATING TEMPERATURE RANGE	-10 to + 45°C (+14 to +113°F)		
OVER TEMPERATURE*	typical 30 K at max NB input power		
INPUT PORTS			
- Narrowband input	7/8" EIA		
- Wideband input	7/8" EIA		
OUTPUT PORT	7/8" EIA		
WEIGHT (approx)	50 kg (110 lb)		

* referred to ambient temperature. Recommended: [AmbientTemp. + OverTemp.] ≤70°C (158°F)

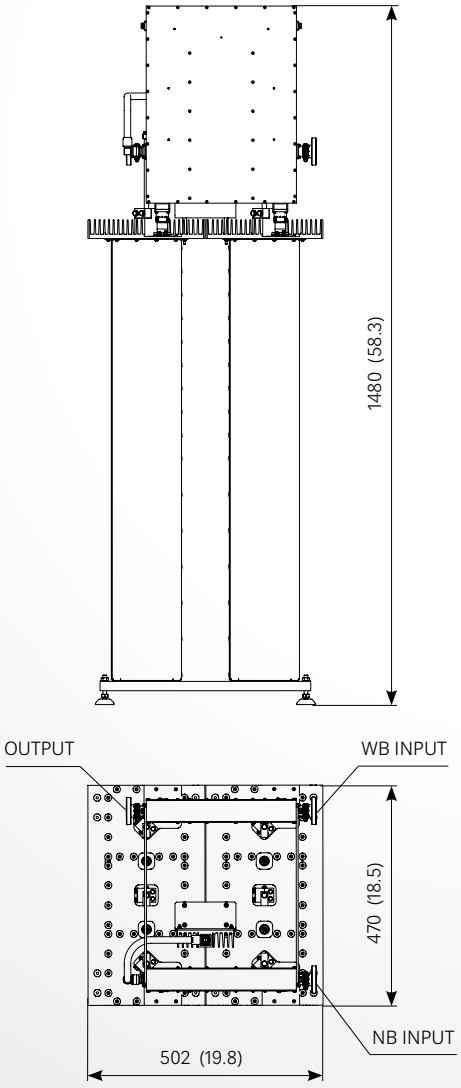

All dimensions are in millimeters (inches)

Specifications are subject to change without prior notice

by NAUTEL SIRA RADIO SYSTEMS

UC/FM/LB4-4

FM DIRECTIONAL FILTER TYPE COMBINER

FEATURES

- FM double bridge channel combiner
- 4 pole / 150 mm (5.9 in)
- adjustable selectivity
- temperature compensated

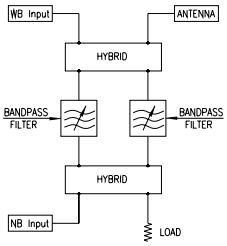

ELECTRICAL AND MECHANICAL DATA

COMBINER TYPE	UC/FM/LB4-4			
FREQUENCY RANGE				
- wideband input	87.5 ÷ 108 MHz			
- narrowband input	Tunable over entire FM range			
INPUTS AND OUTPUT IMPEDANCE	50 ohm			
RETURN LOSS				
- wideband input	≥ 26 dB			
- narrowband input (at carrier fo)	≥ 28 dB			
INSERTION LOSS (at carrier fo)				
NB input with freq. spacing ±1.2 MHz	≤ 0.75 dB			
NB input with freq. spacing ±1.0 MHz	≤ 0.85 dB			
NB input with freq. spacing ±0.8 MHz	≤ 0.99 dB			
NB input with freq. spacing ±0.6 MHz	≤ 1.22 dB			
WB input	≤ 0.10 dB			
WB input with freq. spacing ±0.6 MHz	≤ 0.35 dB			
ISOLATION (at carrier fo)				
- Narrowband input to wideband input	≥ 32 dB			
- Wideband input to narrowband input	≥ 50 dB			
GROUP DELAY	≤ 50 ns at fo ±100 kHz			
(With 0.8 MHz frequency spacing)	≤ 100 ns at fo ±150 kHz			
MAX POWER RATINGS / freq. spacing (MHz)	±1.2	±1.0	±0.8	±0.6
- Narrowband input	4 kW	3.4 kW	3 kW	2.4 kW
- Wideband input	6 kW	6 kW	6 kW	6 kW
- Total output	6 kW	6 kW	6 kW	6 kW
OPERATING TEMPERATURE RANGE	-10 to + 45°C (+14 to +113°F)			
OVER TEMPERATURE*	typical 30 K at max NB input power			
INPUT PORTS				
- Narrowband input	7/8" EIA			
- Wideband input	7/8" EIA			
OUTPUT PORT	7/8" EIA			
WEIGHT (approx)	62 kg (137 lb)			

* referred to ambient temperature. Recommended: [AmbientTemp. + OverTemp.] ≤70°C (158°F)

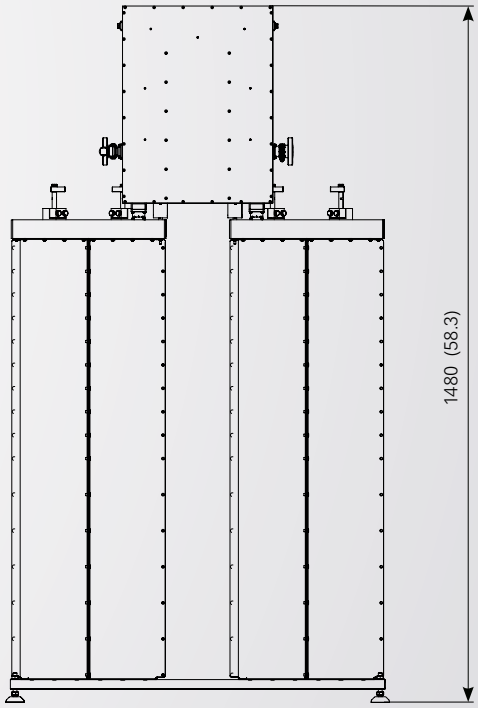

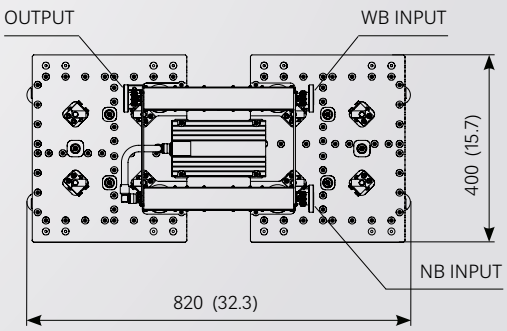

All dimensions are in millimeters (inches)

UC/FM/LB2-6

FM DIRECTIONAL FILTER TYPE COMBINER

FEATURES

- FM double bridge channel combiner
- 2 pole / 200 mm (7.9 in)
- adjustable selectivity
- temperature compensated

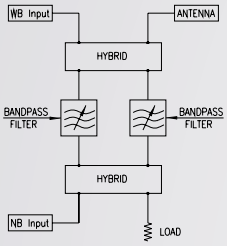

ELECTRICAL AND MECHANICAL DATA

COMBINER TYPE	UC/FM/LB2-6/A		UC/FM/LB2-6/C	
FREQUENCY RANGE				
- wideband input	87.5 ÷ 108 MHz		87.5 ÷ 108 MHz	
- narrowband input	Tunable over entire FM range		Tunable over entire FM range	
INPUTS AND OUTPUT IMPEDANCE	50 ohm		50 ohm	
RETURN LOSS				
- wideband input	≥ 26 dB		≥ 26 dB	
- narrowband input (at carrier fo)	≥ 30 dB		≥ 30 dB	
INSERTION LOSS (at carrier fo)				
NB input with freq. spacing ±2.0 MHz	≤ 0.40 dB		≤ 0.40 dB	
NB input with freq. spacing ±1.6 MHz	≤ 0.45 dB		≤ 0.45 dB	
WB input	≤ 0.10 dB		≤ 0.10 dB	
ISOLATION (at carrier fo)				
- Narrowband input to wideband input	≥ 32 dB		≥ 32 dB	
- Wideband input to narrowband input	≥ 50 dB		≥ 50 dB	
GROUP DELAY	≤ 25 ns at fo ±100 kHz		≤ 25 ns at fo ±100 kHz	
(With 1.6 MHz frequency spacing)	≤ 50 ns at fo ±150 kHz		≤ 50 ns at fo ±150 kHz	
MAX POWER RATINGS / freq. spacing (MHz)	±2.0	±1.6	±2.0	±1.6
- Narrowband input	6 kW	5 kW	6 kW	5 kW
- Wideband input	15 kW	15 kW	25 kW	25 kW
- Total output	15 kW	15 kW	25 kW	25 kW
OPERATING TEMPERATURE RANGE	-10 to + 45°C (+14 to +113°F)		-10 to + 45°C (+14 to +113°F)	
OVER TEMPERATURE*	typical 30 K at max NB input power		typical 30 K at max NB input power	
INPUT PORTS				
- Narrowband input	7/8" EIA		1-5/8" Unfl.	
- Wideband input	1-5/8" Unfl.		3-1/8" Unfl.	
OUTPUT PORT	1-5/8" Unfl.		3-1/8" Unfl.	
WEIGHT (approx)	50 kg (110 lb)		60 kg (132 lb)	

* referred to ambient temperature. Recommended: [AmbientTemp. + OverTemp.] ≤70°C (158°F)

Specifications are subject to change without prior notice

UC/FM/LB2-6

FM DIRECTIONAL FILTER TYPE COMBINER

MECHANICAL LAYOUT

UC/FM/LB2-6/A

UC/FM/LB2-6/C

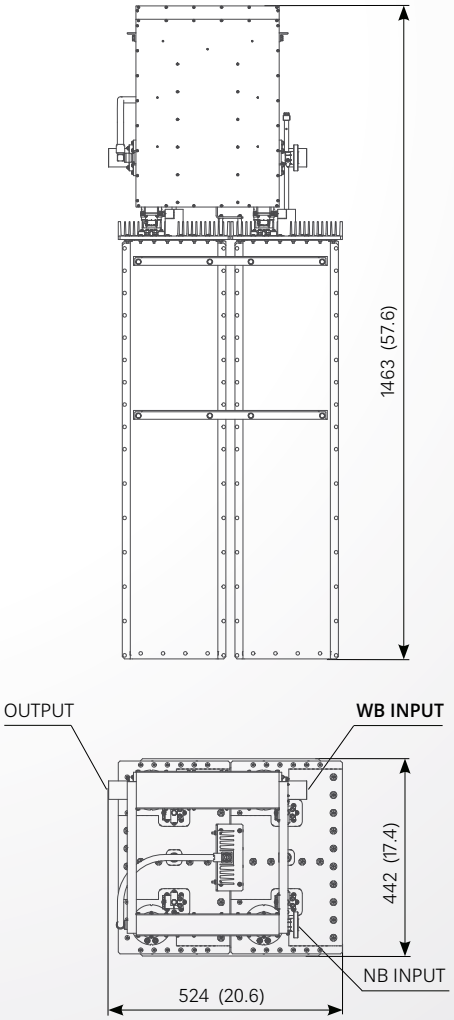

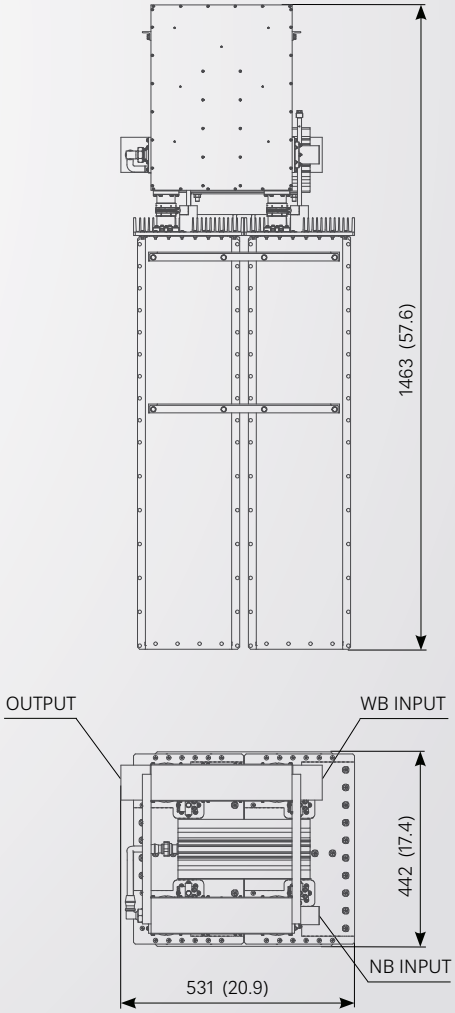

All dimensions are in millimeters (inches)

UC/FM/LB3-6

FM DIRECTIONAL FILTER TYPE COMBINER

FEATURES

- FM double bridge channel combiner
- 3 pole / 200 mm (7.9 in)
- adjustable selectivity
- temperature compensated

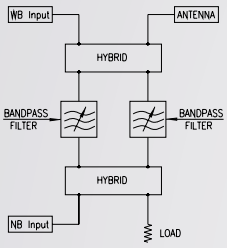

ELECTRICAL AND MECHANICAL DATA

COMBINER TYPE	UC/FM/LB3-6/A			UC/FM/LB3-6/C		
FREQUENCY RANGE						
- wideband input	87.5 ÷ 108 MHz			87.5 ÷ 108 MHz		
- narrowband input	Tunable over entire FM range			Tunable over entire FM range		
INPUTS AND OUTPUT IMPEDANCE	50 ohm			50 ohm		
RETURN LOSS						
- wideband input	≥ 26 dB			≥ 26 dB		
- narrowband input (at carrier fo)	≥ 30 dB			≥ 30 dB		
INSERTION LOSS (at carrier fo)						
NB input with freq. spacing ±1.6 MHz	≤ 0.39 dB			≤ 0.39 dB		
NB input with freq. spacing ±1.2 MHz	≤ 0.47 dB			≤ 0.47 dB		
NB input with freq. spacing ±0.8 MHz	≤ 0.65 dB			≤ 0.65 dB		
WB input	≤ 0.10 dB			≤ 0.10 dB		
WB input with freq. spacing ±0.8 MHz	≤ 0.20 dB			≤ 0.20 dB		
ISOLATION (at carrier fo)						
- Narrowband input to wideband input	≥ 32 dB			≥ 32 dB		
- Wideband input to narrowband input	≥ 50 dB			≥ 50 dB		
GROUP DELAY	≤ 40 ns at fo ±100 kHz			≤ 40 ns at fo ±100 kHz		
(With 0.8 MHz frequency spacing)	≤ 80 ns at fo ±150 kHz			≤ 80 ns at fo ±150 kHz		
MAX POWER RATINGS / freq. spacing (MHz)	±1.6	±1.2	±0.8	±1.6	±1.2	±0.8
- Narrowband input	6 kW	5 kW	3 kW	6 kW	5 kW	3 kW
- Wideband input	15 kW	15 kW	15 kW	25 kW	25 kW	25 kW
- Total output	15 kW	15 kW	15 kW	25 kW	25 kW	25 kW
OPERATING TEMPERATURE RANGE	-10 to + 45°C (+14 to +113°F)			-10 to + 45°C (+14 to +113°F)		
OVER TEMPERATURE*	typical 30 K at max NB input power			typical 30 K at max NB input power		
INPUT PORTS						
- Narrowband input	7/8" EIA			1-5/8" Unfl.		
- Wideband input	1-5/8" Unfl.			3-1/8" Unfl.		
OUTPUT PORT	1-5/8" Unfl.			3-1/8" Unfl.		
WEIGHT (approx)	65 kg (143 lb)			75 kg (165 lb)		

* referred to ambient temperature. Recommended: [AmbientTemp. + OverTemp.] ≤70°C (158°F)

Specifications are subject to change without prior notice

UC/FM/LB3-6

FM DIRECTIONAL FILTER TYPE COMBINER

MECHANICAL LAYOUT

UC/FM/LB3-6/A

UC/FM/LB3-6/C

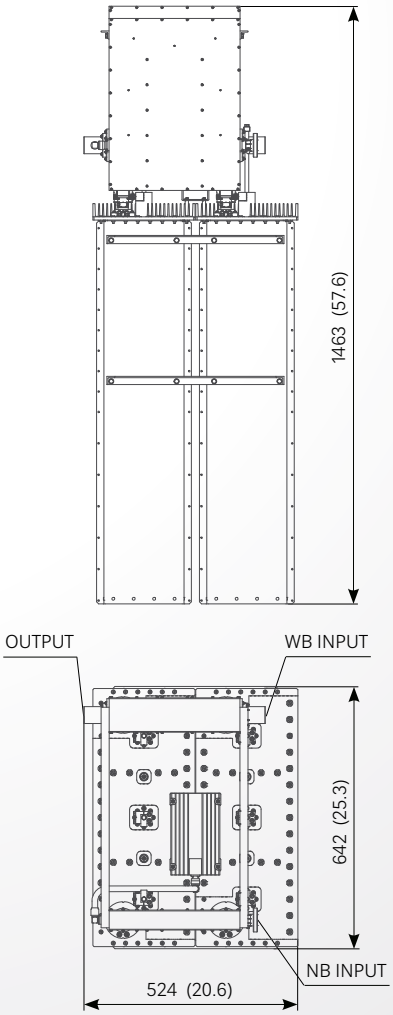

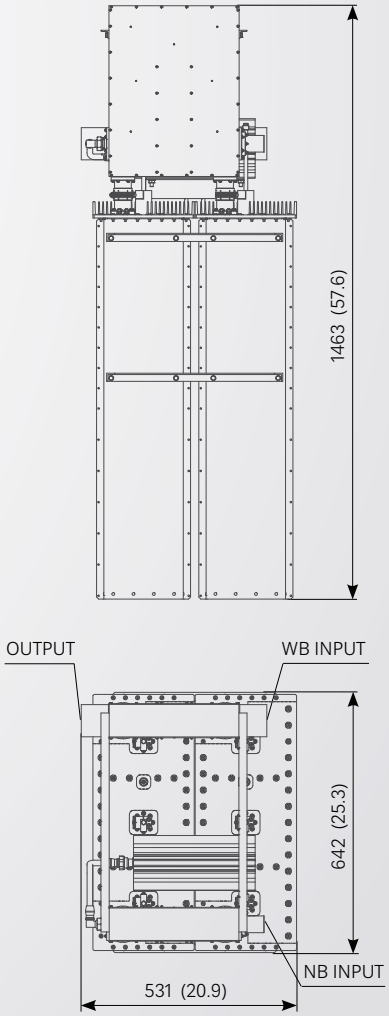

All dimensions are in millimeters (inches)

UC/FM/LB4-6

FM DIRECTIONAL FILTER TYPE COMBINER

FEATURES

- FM double bridge channel combiner
- 4 pole / 200 mm (7.9 in)
- adjustable selectivity
- temperature compensated

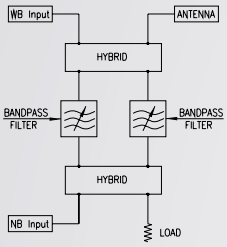

ELECTRICAL AND MECHANICAL DATA

COMBINER TYPE	UC/FM/LB4-6/A			UC/FM/LB4-6/C		
FREQUENCY RANGE						
- wideband input	87.5 ÷ 108 MHz			87.5 ÷ 108 MHz		
- narrowband input	Tunable over entire FM range			Tunable over entire FM range		
INPUTS AND OUTPUT IMPEDANCE	50 ohm			50 ohm		
RETURN LOSS						
- wideband input	≥ 26 dB			≥ 26 dB		
- narrowband input (at carrier fo)	≥ 30 dB			≥ 30 dB		
INSERTION LOSS (at carrier fo)						
NB input with freq. spacing ±1.0 MHz	≤ 0.57 dB			≤ 0.57 dB		
NB input with freq. spacing ±0.8 MHz	≤ 0.66 dB			≤ 0.66 dB		
NB input with freq. spacing ±0.6 MHz	≤ 0.81 dB			≤ 0.81 dB		
WB input	≤ 0.10 dB			≤ 0.10 dB		
WB input with freq. spacing ±0.6 MHz	≤ 0.20 dB			≤ 0.20 dB		
ISOLATION (at carrier fo)						
- Narrowband input to wideband input	≥ 32 dB			≥ 32 dB		
- Wideband input to narrowband input	≥ 50 dB			≥ 50 dB		
GROUP DELAY	≤ 50 ns at fo ±100 kHz			≤ 50 ns at fo ±100 kHz		
(With 0.8 MHz frequency spacing)	≤ 100 ns at fo ±150 kHz			≤ 100 ns at fo ±150 kHz		
MAX POWER RATINGS / freq. spacing (MHz)	±1.0	±0.8	±0.6	±1.0	±0.8	±0.6
- Narrowband input	6 kW	5 kW	3 kW	6 kW	5 kW	3 kW
- Wideband input	15 kW	15 kW	15 kW	25 kW	25 kW	25 kW
- Total output	15 kW	15 kW	15 kW	25 kW	25 kW	25 kW
OPERATING TEMPERATURE RANGE	-10 to + 45°C (+14 to +113°F)			-10 to + 45°C (+14 to +113°F)		
OVER TEMPERATURE*	typical 30 K at max NB input power			typical 30 K at max NB input power		
INPUT PORTS						
- Narrowband input	7/8" EIA			1-5/8" Unfl.		
- Wideband input	1-5/8" Unfl.			3-1/8" Unfl.		
OUTPUT PORT	1-5/8" Unfl.			3-1/8" Unfl.		
WEIGHT (approx)	82 kg (181 lb)			90 kg (198 lb)		

* referred to ambient temperature. Recommended: [AmbientTemp. + OverTemp.] ≤70°C (158°F)

Specifications are subject to change without prior notice

UC/FM/LB4-6

FM DIRECTIONAL FILTER TYPE COMBINER

MECHANICAL LAYOUT

UC/FM/LB4-6/A

UC/FM/LB4-6/C

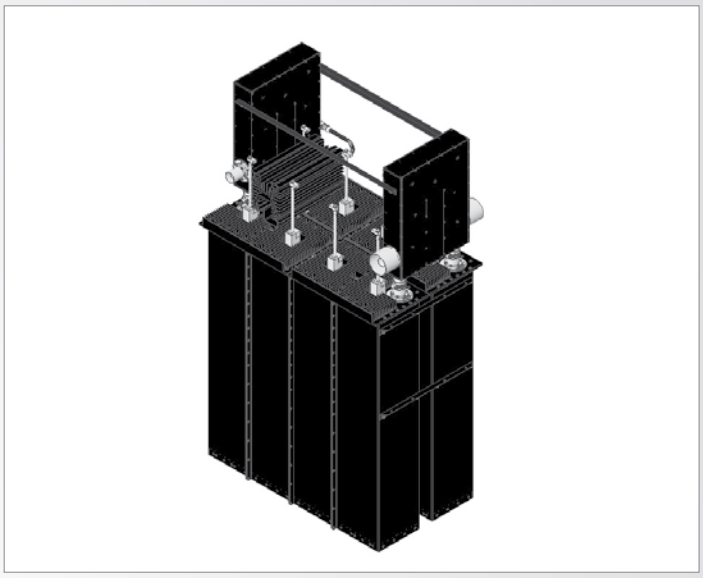

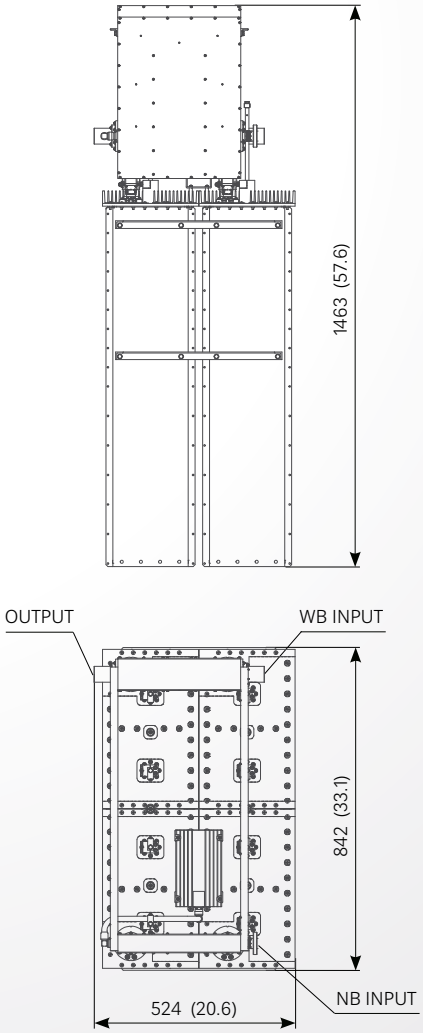

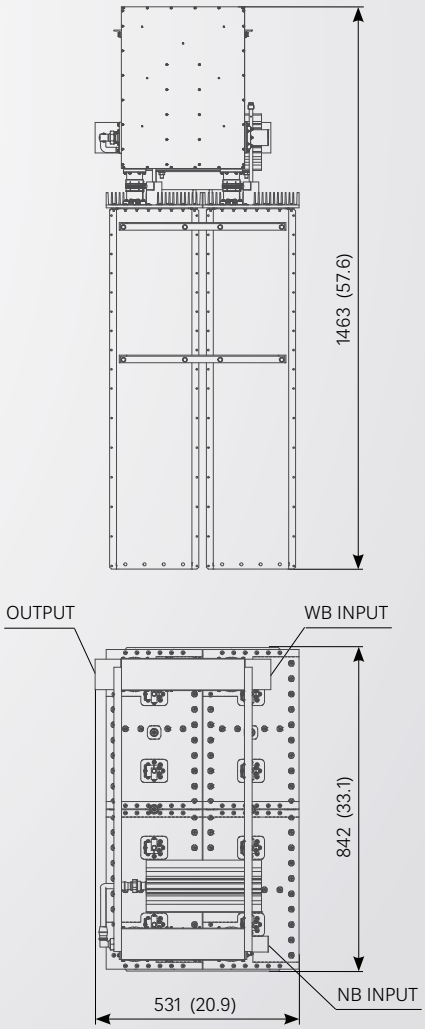

All dimensions are in millimeters (inches)

UC/FM/LB2-10

FM DIRECTIONAL FILTER TYPE COMBINER

FEATURES

- FM double bridge channel combiner
- 2 pole / 350 or 500 mm (13.8 or 19.7 in)
- adjustable selectivity
- temperature compensated

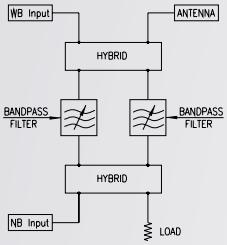

ELECTRICAL AND MECHANICAL DATA

COMBINER TYPE	UC/FM/LB2-10/A		UC/FM/LB2-10/C	
FREQUENCY RANGE				
- wideband input	87.5 ÷ 108 MHz		87.5 ÷ 108 MHz	
- narrowband input	Tunable over entire FM range		Tunable over entire FM range	
INPUTS AND OUTPUT IMPEDANCE	50 ohm		50 ohm	
RETURN LOSS				
- wideband input	≥ 26 dB		≥ 26 dB	
- narrowband input (at carrier fo)	≥ 32 dB		≥ 32 dB	
INSERTION LOSS (at carrier fo)				
NB input with freq. spacing ±2.0 MHz	≤ 0.25 dB		≤ 0.18 dB	
NB input with freq. spacing ±1.6 MHz	≤ 0.28 dB		≤ 0.20 dB	
WB input	≤ 0.10 dB		≤ 0.10 dB	
ISOLATION (at carrier fo)				
- Narrowband input to wideband input	≥ 35 dB (typical)		≥ 35 dB (typical)	
- Wideband input to narrowband input	≥ 50 dB		≥ 50 dB	
GROUP DELAY	≤ 25 ns at fo ±100 kHz		≤ 25 ns at fo ±100 kHz	
(With 1.6 MHz frequency spacing)	≤ 50 ns at fo ±150 kHz		≤ 50 ns at fo ±150 kHz	
MAX POWER RATINGS / freq. spacing (MHz)	±2.0	±1.6	±2.0	±1.6
- Narrowband input	12 kW	10 kW	15 kW	15 kW
- Wideband input	15 / 30 kW	15 / 30 kW	45 kW	45 kW
- Total output	15 / 30 kW	15 / 30 kW	45 kW	45 kW
OPERATING TEMPERATURE RANGE	-10 to + 45°C (+14 to +113°F)		-10 to + 45°C (+14 to +113°F)	
OVER TEMPERATURE*	typical 30 K at max NB input power		typical 30 K at max NB input power	
INPUT PORTS				
- Narrowband input	1-5/8" Unfl.		1-5/8" Unfl.	
- Wideband input	1-5/8" Unfl. / 3-1/8" Unfl.		3-1/8" Unfl.	
OUTPUT PORT	1-5/8" Unfl. / 3-1/8" Unfl.		3-1/8" Unfl.	
WEIGHT (approx)	130 kg (287 lb)		210 kg (463 lb)	

* referred to ambient temperature. Recommended: [AmbientTemp. + OverTemp.] ≤70°C (158°F)

Specifications are subject to change without prior notice

UC/FM/LB2-10

FM DIRECTIONAL FILTER TYPE COMBINER

MECHANICAL LAYOUT

UC/FM/LB2-10/A

UC/FM/LB2-10/C

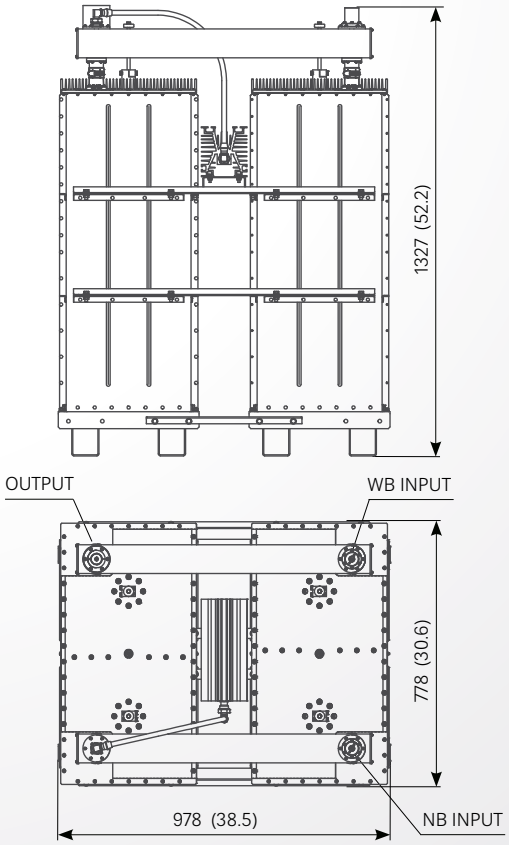

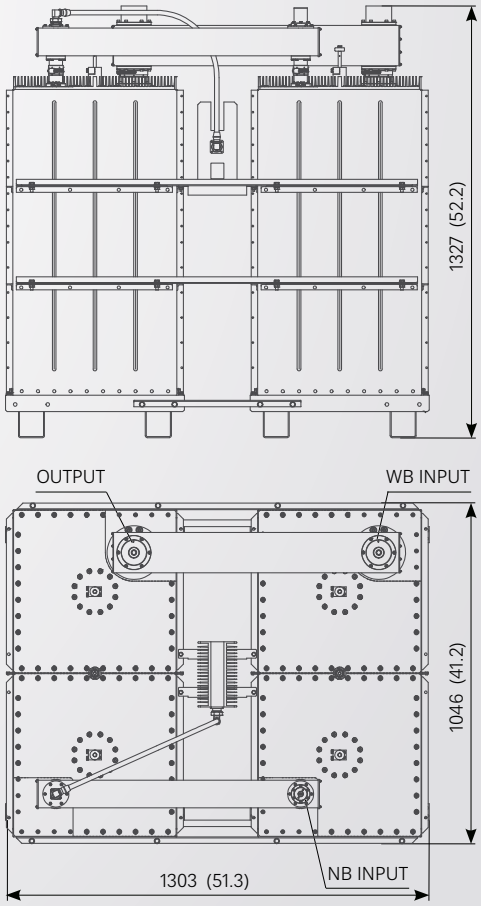

All dimensions are in millimeters (inches)

UC/FM/LB3-10

FM DIRECTIONAL FILTER TYPE COMBINER

FEATURES

- FM double bridge channel combiner
- 3 pole / 350 or 500 mm (13.8 or 19.7 in)
- adjustable selectivity
- temperature compensated

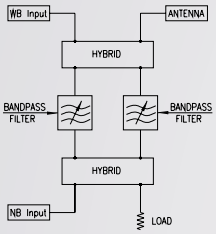

ELECTRICAL AND MECHANICAL DATA

COMBINER TYPE	UC/FM/LB3-10/A			UC/FM/LB3-10/C		
FREQUENCY RANGE						
- wideband input	87.5 ÷ 108 MHz			87.5 ÷ 108 MHz		
- narrowband input	Tunable over entire FM range			Tunable over entire FM range		
INPUTS AND OUTPUT IMPEDANCE	50 ohm			50 ohm		
RETURN LOSS						
- wideband input	≥ 26 dB			≥ 26 dB		
- narrowband input (at carrier fo)	≥ 32 dB			≥ 32 dB		
INSERTION LOSS (at carrier fo)						
NB input with freq. spacing ±1.6 MHz	≤ 0.33 dB			≤ 0.21 dB		
NB input with freq. spacing ±1.2 MHz	≤ 0.37 dB			≤ 0.26 dB		
NB input with freq. spacing ±0.8 MHz	≤ 0.50 dB			≤ 0.32 dB		
WB input	≤ 0.10 dB			≤ 0.10 dB		
WB input (0.8MHz freq. spacing)	≤ 0.20 dB			≤ 0.15 dB		
ISOLATION (at carrier fo)						
- Narrowband input to wideband input	≥ 35 dB (typical)			≥ 35 dB (typical)		
- Wideband input to narrowband input	≥ 50 dB			≥ 50 dB		
GROUP DELAY	≤ 40 ns at fo ±100 kHz			≤ 40 ns at fo ±100 kHz		
(With 0.8 MHz frequency spacing)	≤ 80 ns at fo ±150 kHz			≤ 80 ns at fo ±150 kHz		
MAX POWER RATINGS / freq. spacing (MHz)	±1.6	±1.2	±0.8	±1.6	±1.2	±0.8
- Narrowband input **	12 kW	12 kW	10 kW	15 kW	15 kW	15 kW
- Wideband input	15 / 30 kW	15 / 30 kW	15 / 30 kW	45 kW	45 kW	45 kW
- Total output	15 / 30 kW	15 / 30 kW	15 / 30 kW	45 kW	45 kW	45 kW
OPERATING TEMPERATURE RANGE	-10 to + 45°C (+14 to +113°F)			-10 to + 45°C (+14 to +113°F)		
OVER TEMPERATURE*	typical 30 K at max NB input power			typical 30 K at max NB input power		
INPUT PORTS						
- Narrowband input	1-5/8" Unfl.			1-5/8" Unfl.		
- Wideband input	1-5/8" Unfl. / 3-1/8" Unfl.			3-1/8" Unfl.		
OUTPUT PORT	1-5/8" Unfl. / 3-1/8" Unfl.			3-1/8" Unfl.		
WEIGHT (approx)	173 kg (381 lb)			275 kg (606 lb)		

* referred to ambient temperature. Recommended: [AmbientTemp. + OverTemp.] ≤70°C (158°F)
** increased power on request

Specifications are subject to change without prior notice

UC/FM/LB3-10

FM DIRECTIONAL FILTER TYPE COMBINER

MECHANICAL LAYOUT

UC/FM/LB3-10/A

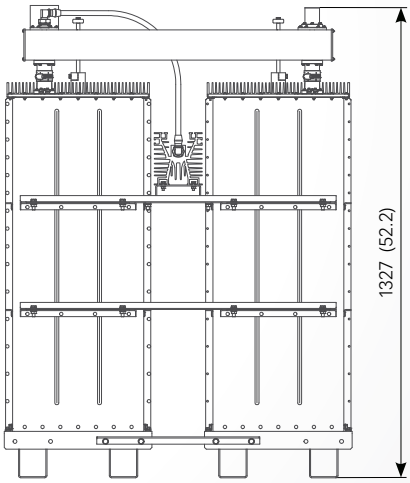

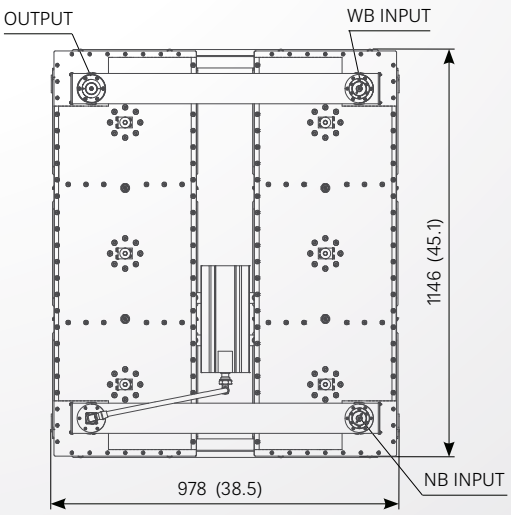

UC/FM/LB3-10/C

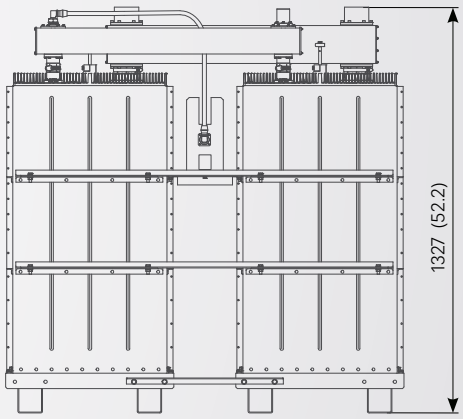

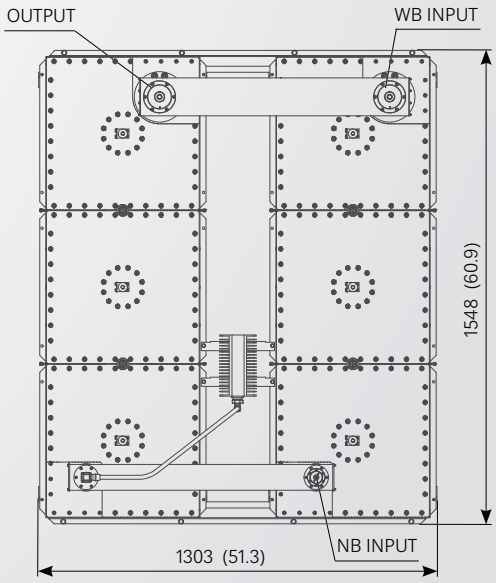

All dimensions are in millimeters (inches)

UC/FM/LB4-10

FM DIRECTIONAL FILTER TYPE COMBINER

FEATURES

- FM double bridge channel combiner
- 4 pole / 350 or 500 mm (13.8 or 19.7 in)
- adjustable selectivity
- temperature compensated

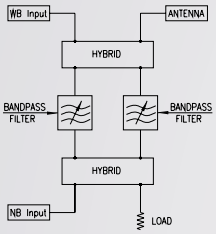

ELECTRICAL AND MECHANICAL DATA

COMBINER TYPE	UC/FM/LB4-10/A			UC/FM/LB4-10/C		
FREQUENCY RANGE						
- wideband input	87.5 ÷ 108 MHz			87.5 ÷ 108 MHz		
- narrowband input	Tunable over entire FM range			Tunable over entire FM range		
INPUTS AND OUTPUT IMPEDANCE	50 ohm			50 ohm		
RETURN LOSS						
- wideband input	≥ 26 dB			≥ 26 dB		
- narrowband input (at carrier fo)	≥ 32 dB			≥ 32 dB		
INSERTION LOSS (at carrier fo)						
NB input with freq. spacing ±1.0 MHz	≤ 0.43 dB			≤ 0.32 dB		
NB input with freq. spacing ±0.8 MHz	≤ 0.47 dB			≤ 0.38 dB		
NB input with freq. spacing ±0.6 MHz	≤ 0.55 dB			≤ 0.46 dB		
WB input	≤ 0.10 dB			≤ 0.10 dB		
WB input (0.6MHz freq. spacing)	≤ 0.20 dB			≤ 0.20 dB		
ISOLATION (at carrier fo)						
- Narrowband input to wideband input	≥ 35 dB (typical)			≥ 35 dB (typical)		
- Wideband input to narrowband input	≥ 50 dB			≥ 50 dB		
GROUP DELAY	≤ 50 ns at fo ±100 kHz			≤ 50 ns at fo ±100 kHz		
(With 0.6 MHz frequency spacing)	≤ 100 ns at fo ±150 kHz			≤ 100 ns at fo ±150 kHz		
MAX POWER RATINGS / freq. spacing (MHz)	±1.0	±0.8	±0.6	±1.0	±0.8	±0.6
- Narrowband input**	12 kW	12 kW	10 kW	15 kW	15 kW	15 kW
- Wideband input	15 / 30 kW	15 / 30 kW	15 / 30 kW	45 kW	45 kW	45 kW
- Total output	15 / 30 kW	15 / 30 kW	15 / 30 kW	45 kW	45 kW	45 kW
OPERATING TEMPERATURE RANGE	-10 to + 45°C (+14 to +113°F)			-10 to + 45°C (+14 to +113°F)		
OVER TEMPERATURE*	typical 30 K at max NB input power			typical 30 K at max NB input power		
INPUT PORTS						
- Narrowband input	1-5/8" Unfl.			1-5/8" Unfl.		
- Wideband input	1-5/8" Unfl. / 3-1/8" Unfl.			3-1/8" Unfl.		
OUTPUT PORT	1-5/8" Unfl. / 3-1/8" Unfl.			3-1/8" Unfl.		
WEIGHT (approx)	220 kg (485 lb)			355 kg (783)		

* referred to ambient temperature. Recommended: [AmbientTemp. + OverTemp.] ≤70°C (158°F)
** increased power on request

Specifications are subject to change without prior notice

UC/FM/LB4-10

FM DIRECTIONAL FILTER TYPE COMBINER

MECHANICAL LAYOUT

UC/FM/LB4-10/A

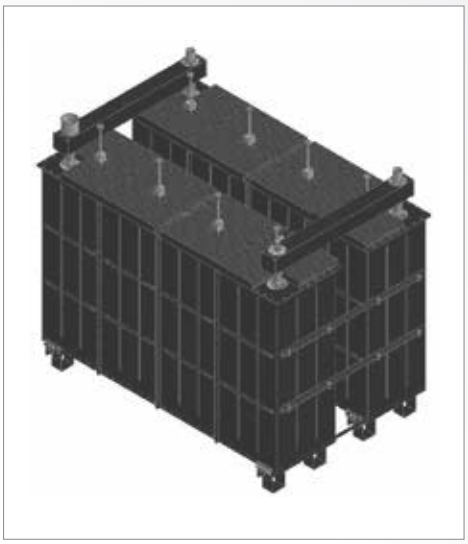

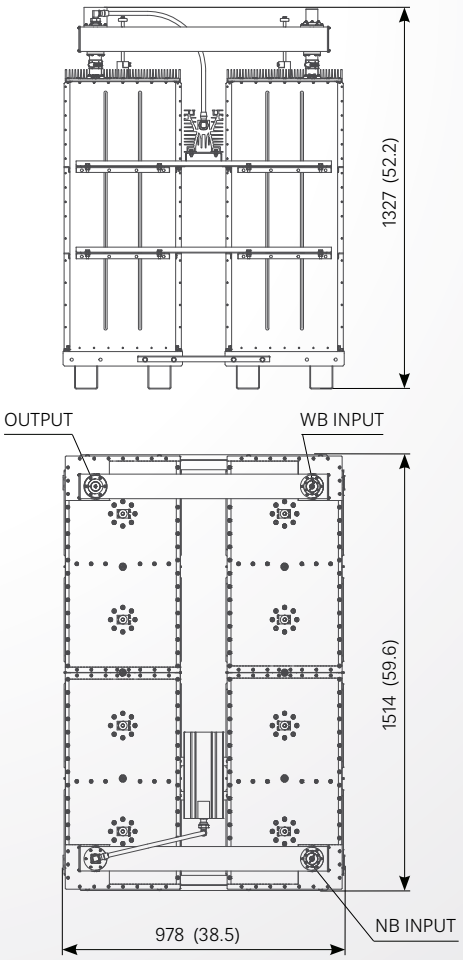

UC/FM/LB4-10/C

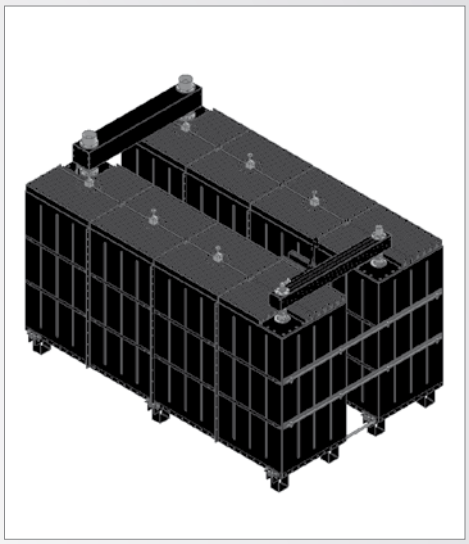

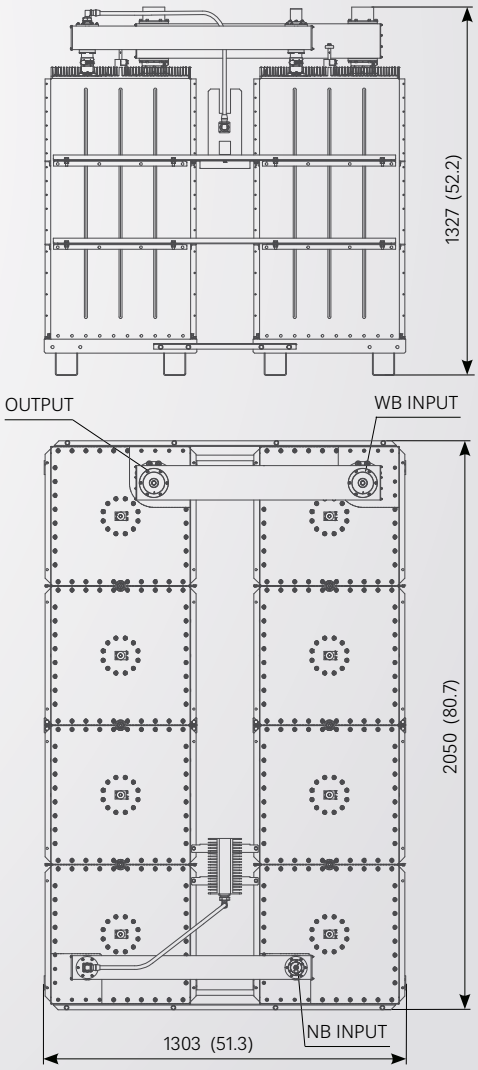

All dimensions are in millimeters (inches)

UC/FM/LB2-20

FM DIRECTIONAL FILTER TYPE COMBINER

FEATURES

- FM double bridge channel combiner
- 2 pole / 500 mm (19.7 in)
- adjustable selectivity
- temperature compensated

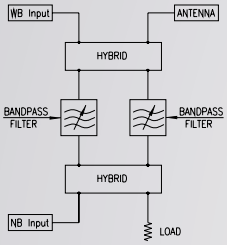

ELECTRICAL AND MECHANICAL DATA

COMBINER TYPE	UC/FM/LB2-20/A		UC/FM/LB2-20/B		UC/FM/LB2-20/C	
FREQUENCY RANGE						
- wideband input	87.5 ÷ 108 MHz		87.5 ÷ 108 MHz		87.5 ÷ 108 MHz	
- narrowband input	Tunable over entire FM range		Tunable over entire FM range		Tunable over entire FM range	
INPUTS AND OUTPUT IMPEDANCE	50 ohm		50 ohm		50 ohm	
RETURN LOSS						
- wideband input	≥ 26 dB		≥ 26 dB		≥ 26 dB	
- narrowband input (at carrier fo)	≥ 32 dB		≥ 32 dB		≥ 32 dB	
INSERTION LOSS (at carrier fo)						
NB input with freq. spacing ±2.0 MHz	≤ 0.18 dB		≤ 0.18 dB		≤ 0.18 dB	
NB input with freq. spacing ±1.6 MHz	≤ 0.20 dB		≤ 0.20 dB		≤ 0.20 dB	
WB input	≤ 0.10 dB		≤ 0.10 dB		≤ 0.10 dB	
ISOLATION (at carrier fo)						
- Narrowband input to wideband input	≥ 35 dB (typical)		≥ 35 dB (typical)		≥ 35 dB (typical)	
- Wideband input to narrowband input	≥ 50 dB		≥ 50 dB		≥ 50 dB	
GROUP DELAY	≤ 25 ns at fo ±100 kHz		≤ 25 ns at fo ±100 kHz		≤ 25 ns at fo ±100 kHz	
(With 1.6 MHz frequency spacing)	≤ 50 ns at fo ±150 kHz		≤ 50 ns at fo ±150 kHz		≤ 50 ns at fo ±150 kHz	
MAX POWER RATINGS / freq. spacing (MHz)	±2.0	±1.6	±2.0	±1.6	±2.0	±1.6
- Narrowband input	24 kW	20 kW	24 kW	20 kW	24 kW	20 kW
- Wideband input	45 kW	45 kW	70 kW	70 kW	120 kW	120 kW
- Total output	45 kW	45 kW	70 kW	70 kW	120 kW	120 kW
OPERATING TEMPERATURE RANGE	-10 to + 45°C (+14 to +113°F)		-10 to + 45°C (+14 to +113°F)		-10 to + 45°C (+14 to +113°F)	
OVER TEMPERATURE*	typical 30 K at max NB input power		typical 30 K at max NB input power		typical 30 K at max NB input power	
INPUT PORTS						
- Narrowband input	3-1/8" Unfl.		3-1/8" Unfl.		3-1/8" Unfl.	
- Wideband input	3-1/8" Unfl.		4-1/2" Unfl.		6-1/8" Unfl.	
OUTPUT PORT	3-1/8" Unfl.		4-1/2" Unfl.		6-1/8" Unfl.	
WEIGHT (approx)	215 kg (474 lb)		230 kg (507 lb)		250 kg (551 lb)	

* referred to ambient temperature. Recommended: [AmbientTemp. + OverTemp.] ≤70°C (158°F)

Specifications are subject to change without prior notice

UC/FM/LB2-20

FM DIRECTIONAL FILTER TYPE COMBINER

MECHANICAL LAYOUT

UC/FM/LB2-20/A	UC/FM/LB2-20/B	UC/FM/LB2-20/C

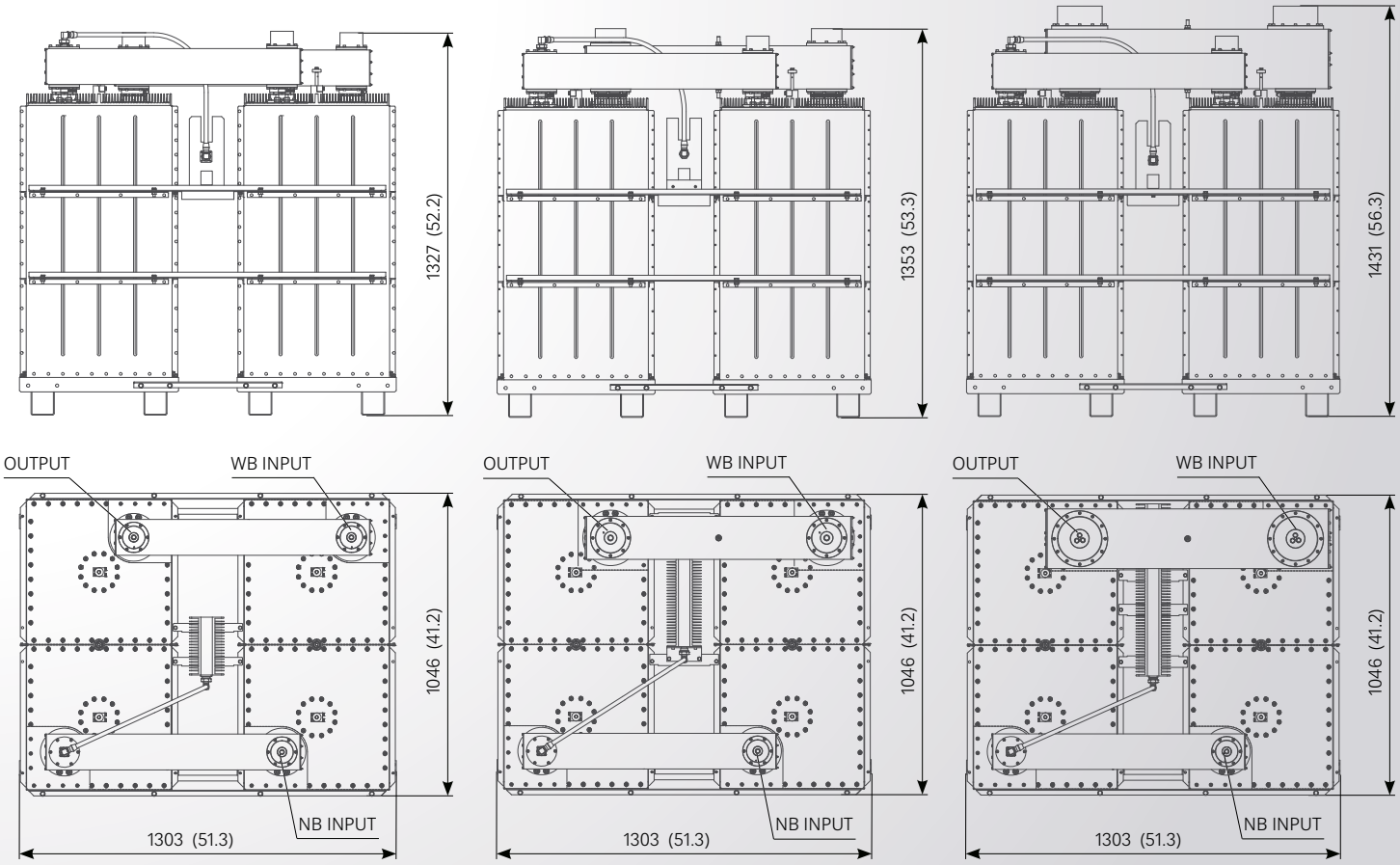

UC/FM/LB3-20

FM DIRECTIONAL FILTER TYPE COMBINER

FEATURES

- FM double bridge channel combiner
- 3 pole / 500 mm (19.7 in)
- adjustable selectivity
- temperature compensated

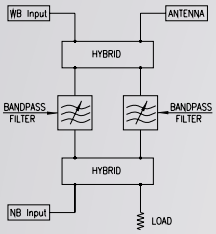

ELECTRICAL AND MECHANICAL DATA

COMBINER TYPE	UC/FM/LB3-20/A			UC/FM/LB3-20/B			UC/FM/LB3-20/C		
FREQUENCY RANGE									
- wideband input	87.5 ÷ 108 MHz			87.5 ÷ 108 MHz			87.5 ÷ 108 MHz		
- narrowband input	Tunable over entire FM range			Tunable over entire FM range			Tunable over entire FM range		
INPUTS AND OUTPUT IMPEDANCE	50 ohm			50 ohm			50 ohm		
RETURN LOSS									
- wideband input	≥ 26 dB			≥ 26 dB			≥ 26 dB		
- narrowband input (at carrier fo)	≥ 32 dB			≥ 32 dB			≥ 32 dB		
INSERTION LOSS (at carrier fo)									
NB input with freq. spacing ±1.6 MHz	≤ 0.21 dB			≤ 0.21 dB			≤ 0.21 dB		
NB input with freq. spacing ±1.2 MHz	≤ 0.26 dB			≤ 0.26 dB			≤ 0.26 dB		
NB input with freq. spacing ±0.8 MHz	≤ 0.32 dB			≤ 0.32 dB			≤ 0.32 dB		
WB input	≤ 0.10 dB			≤ 0.10 dB			≤ 0.10 dB		
WB input (0.8MHz freq. spacing)	≤ 0.15 dB			≤ 0.15 dB			≤ 0.15 dB		
ISOLATION (at carrier fo)									
- Narrowband input to wideband input	≥ 35 dB (typical)			≥ 35 dB (typical)			≥ 35 dB (typical)		
- Wideband input to narrowband input	≥ 50 dB			≥ 50 dB			≥ 50 dB		
GROUP DELAY	≤ 40 ns at fo ±100 kHz			≤ 40 ns at fo ±100 kHz			≤ 40 ns at fo ±100 kHz		
(With 0.8 MHz frequency spacing)	≤ 80 ns at fo ±150 kHz			≤ 80 ns at fo ±150 kHz			≤ 80 ns at fo ±150 kHz		
MAX POWER RATINGS / freq. spacing (MHz)	±1.6	±1.2	±0.8	±1.6	±1.2	±0.8	±1.6	±1.2	±0.8
- Narrowband input **	25 kW	25 kW	20 kW	25 kW	25 kW	20 kW	25 kW	25 kW	20 kW
- Wideband input	45 kW	45 kW	45 kW	70 kW	70 kW	70 kW	120 kW	120 kW	120 kW
- Total output	45 kW	45 kW	45 kW	70 kW	70 kW	70 kW	120 kW	120 kW	120 kW
OPERATING TEMPERATURE RANGE	-10 to + 45°C (+14 to +113°F)			-10 to + 45°C (+14 to +113°F)			-10 to + 45°C (+14 to +113°F)		
OVER TEMPERATURE*	typical 30 K at max NB input power			typical 30 K at max NB input power			typical 30 K at max NB input power		
INPUT PORTS									
- Narrowband input	3-1/8" Unfl.			3-1/8" Unfl.			3-1/8" Unfl.		
- Wideband input	3-1/8" Unfl.			4-1/2" Unfl.			6-1/8" Unfl.		
OUTPUT PORT	3-1/8" Unfl.			4-1/2" Unfl.			6-1/8" Unfl.		
WEIGHT (approx)	285 kg (628 lb)			300 kg (661 lb)			320 kg (705 lb)		

* referred to ambient temperature. Recommended: [AmbientTemp. + OverTemp.] ≤70°C (158°F)
** increased power on request

Specifications are subject to change without prior notice

UC/FM/LB3-20

FM DIRECTIONAL FILTER TYPE COMBINER

MECHANICAL LAYOUT

UC/FM/LB3-20/A	UC/FM/LB3-20/B	UC/FM/LB3-20/C

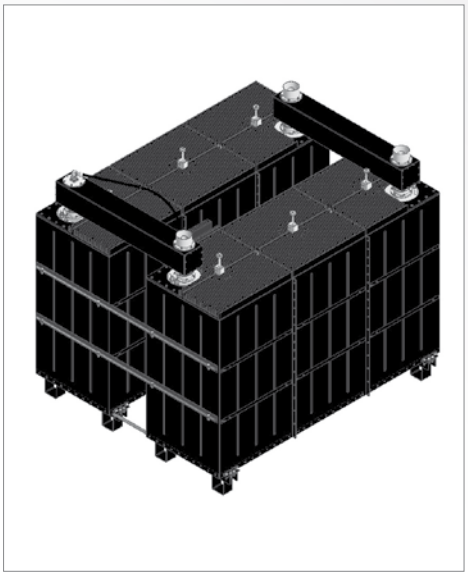

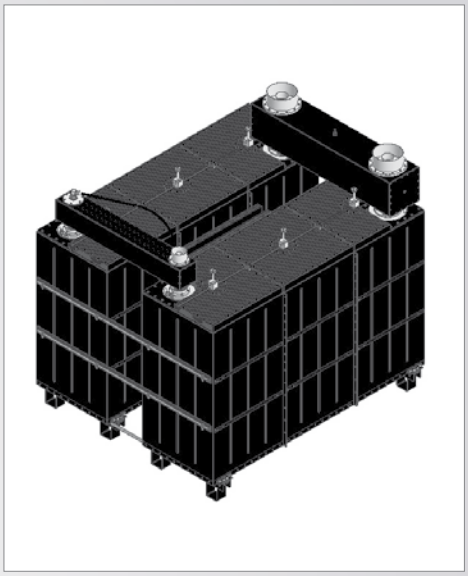

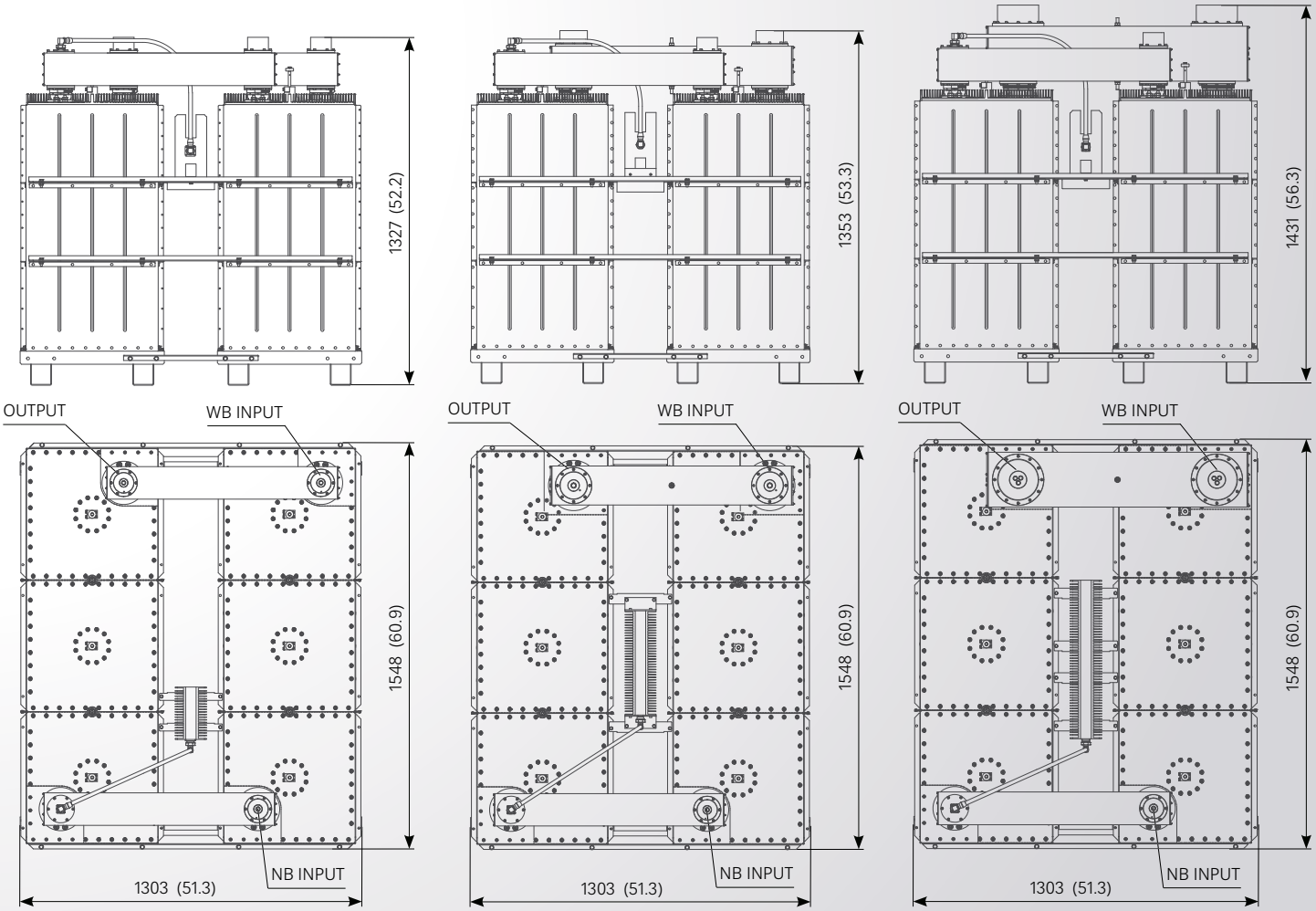

UC/FM/LB4-20

FM DIRECTIONAL FILTER TYPE COMBINER

FEATURES

- FM double bridge channel combiner
- 4 pole / 500 mm (19.7 in)
- adjustable selectivity
- temperature compensated

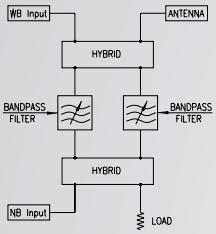

ELECTRICAL AND MECHANICAL DATA

COMBINER TYPE	UC/FM/LB4-20/A			UC/FM/LB4-20/B			UC/FM/LB4-20/C		
FREQUENCY RANGE									
- wideband input	87.5 ÷ 108 MHz			87.5 ÷ 108 MHz			87.5 ÷ 108 MHz		
- narrowband input	Tunable over entire FM range			Tunable over entire FM range			Tunable over entire FM range		
INPUTS AND OUTPUT IMPEDANCE	50 ohm			50 ohm			50 ohm		
RETURN LOSS									
- wideband input	≥ 26 dB			≥ 26 dB			≥ 26 dB		
- narrowband input (at carrier fo)	≥ 32 dB			≥ 32 dB			≥ 32 dB		
INSERTION LOSS (at carrier fo)									
NB input with freq. spacing ±1.0 MHz	≤ 0.32 dB			≤ 0.32 dB			≤ 0.32 dB		
NB input with freq. spacing ±0.8 MHz	≤ 0.38 dB			≤ 0.38 dB			≤ 0.38 dB		
NB input with freq. spacing ±0.6 MHz	≤ 0.46 dB			≤ 0.46 dB			≤ 0.46 dB		
WB input	≤ 0.10 dB			≤ 0.10 dB			≤ 0.10 dB		
WB input (0.6MHz freq. spacing)	≤ 0.20 dB			≤ 0.20 dB			≤ 0.20 dB		
ISOLATION (at carrier fo)									
- Narrowband input to wideband input	≥ 35 dB (typical)			≥ 35 dB (typical)			≥ 35 dB (typical)		
- Wideband input to narrowband input	≥ 50 dB			≥ 50 dB			≥ 50 dB		
GROUP DELAY	≤ 50 ns at fo ±100 kHz			≤ 50 ns at fo ±100 kHz			≤ 50 ns at fo ±100 kHz		
(With 0.6 MHz frequency spacing)	≤ 100 ns at fo ±150 kHz			≤ 100 ns at fo ±150 kHz			≤ 100 ns at fo ±150 kHz		
MAX POWER RATINGS / freq. spacing (MHz)	±1.0	±0.8	±0.6	±1.0	±0.8	±0.6	±1.0	±0.8	±0.6
- Narrowband input **	25 kW	24 kW	20 kW	25 kW	24 kW	20 kW	25 kW	24 kW	20 kW
- Wideband input	45 kW	45 kW	45 kW	70 kW	70 kW	70 kW	120 kW	120 kW	120 kW
- Total output	45 kW	45 kW	45 kW	70 kW	70 kW	70 kW	120 kW	120 kW	120 kW
OPERATING TEMPERATURE RANGE	-10 to + 45°C (+14 to +113°F)			-10 to + 45°C (+14 to +113°F)			-10 to + 45°C (+14 to +113°F)		
OVER TEMPERATURE*	typical 30 K at max NB input power			typical 30 K at max NB input power			typical 30 K at max NB input power		
INPUT PORTS									
- Narrowband input	3-1/8" Unfl.			3-1/8" Unfl.			3-1/8" Unfl.		
- Wideband input	3-1/8" Unfl.			4-1/2" Unfl.			6-1/8" Unfl.		
OUTPUT PORT	3-1/8" Unfl.			4-1/2" Unfl.			6-1/8" Unfl.		
WEIGHT (approx)	360 kg (794 lb)			375 kg (827 lb)			395 kg (871 lb)		

* referred to ambient temperature. Recommended: [AmbientTemp. + OverTemp.] ≤70°C (158°F)
** increased power on request

Specifications are subject to change without prior notice

UC/FM/LB4-20

FM DIRECTIONAL FILTER TYPE COMBINER

MECHANICAL LAYOUT

UC/FM/LB4-20/A	UC/FM/LB4-20/B	UC/FM/LB4-20/C

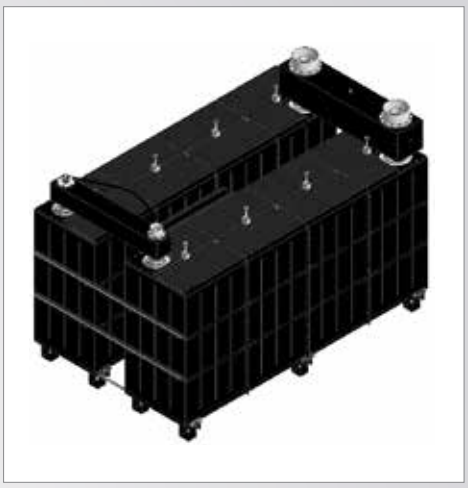

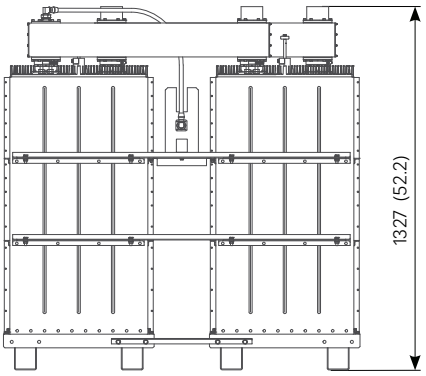

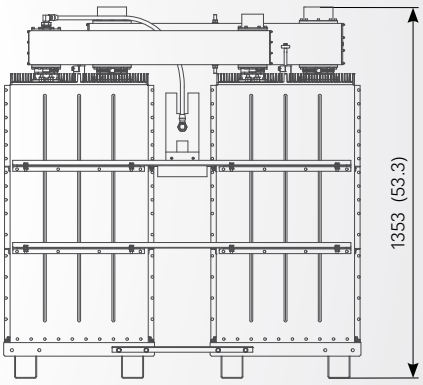

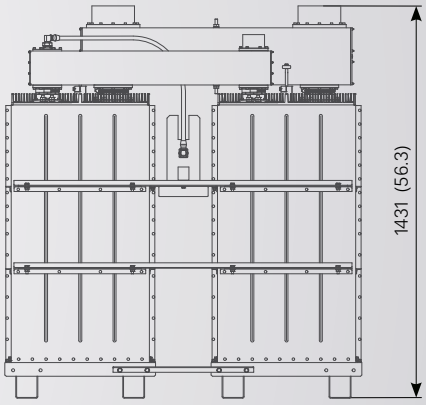

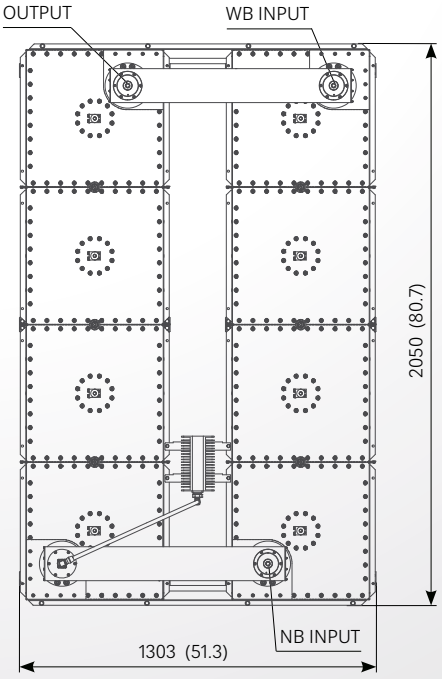

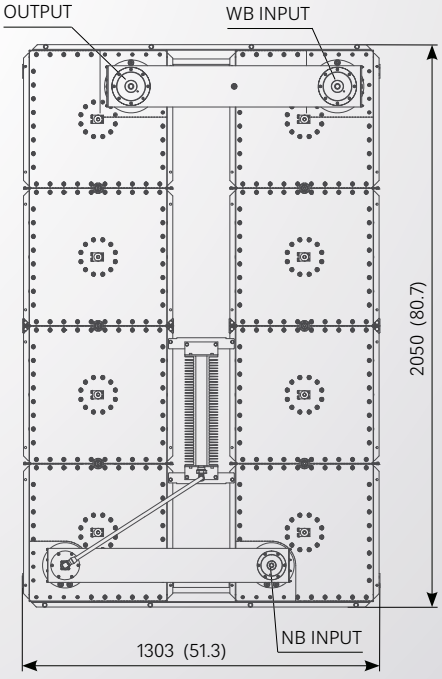

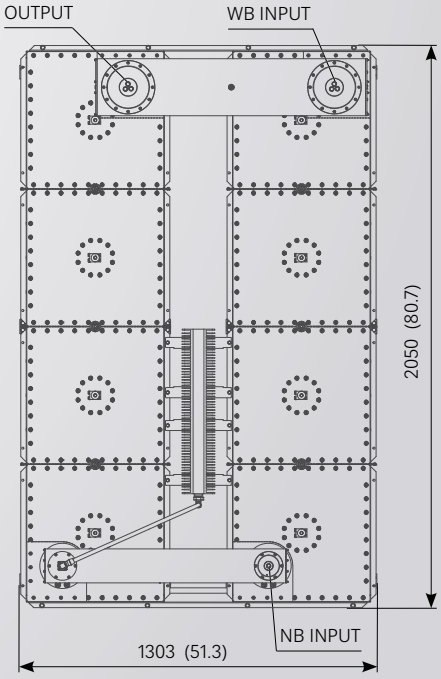

All dimensions are in millimeters (inches)

UC/FM/LB4-20/F

FM DIRECTIONAL FILTER TYPE COMBINER

FEATURES

- FM double bridge channel combiner
- 4 pole / 500 mm (19.7 in)
- adjustable selectivity
- temperature compensated

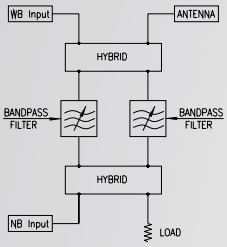

ELECTRICAL AND MECHANICAL DATA

COMBINER TYPE	UC/FM/LB4-20/B/F	UC/FM/LB4-20/C/F
FREQUENCY RANGE		
- wideband input	87.5 ÷ 108 MHz	87.5 ÷ 108 MHz
- narrowband input	Tunable over entire FM range	Tunable over entire FM range
INPUTS AND OUTPUT IMPEDANCE	50 ohm	50 ohm
RETURN LOSS		
- wideband input	≥ 26 dB	≥ 26 dB
- narrowband input (at carrier fo)	≥ 32 dB	≥ 32 dB
INSERTION LOSS (at carrier fo)		
NB input with freq. spacing ±0.6 MHz	≤ 0.45 dB	≤ 0.45 dB
WB input	≤ 0.10 dB	≤ 0.10 dB
WB input (0.6MHz freq. spacing)	≤ 0.20 dB	≤ 0.20 dB
ISOLATION (at carrier fo)		
- Narrowband input to wideband input	≥ 35 dB (typical)	≥ 35 dB (typical)
- Wideband input to narrowband input	≥ 55 dB	≥ 55 dB
GROUP DELAY	≤ 50 ns at fo ±100 kHz	≤ 50 ns at fo ±100 kHz
(With 0.6 MHz frequency spacing)	≤ 100 ns at fo ±150 kHz	≤ 100 ns at fo ±150 kHz
MAX POWER RATINGS / freq. spacing (MHz)	±0.6	±0.6
- Narrowband input	20 kW	20 kW
- Wideband input	70 kW	120 kW
- Total output	70 kW	120 kW
OPERATING TEMPERATURE RANGE	-10 to + 45°C (+14 to +113°F)	-10 to + 45°C (14 to 113°F)
OVER TEMPERATURE*	typical 30 K at max NB input power	typical 30 K at max NB input power
INPUT PORTS		
- Narrowband input	3-1/8" Unfl.	3-1/8" Unfl.
- Wideband input	4-1/2" Unfl.	6-1/8" Unfl.
OUTPUT PORT	4-1/2" Unfl.	6-1/8" Unfl.
WEIGHT (approx)	365 kg (805 lb)	390 kg (860 lb)

* referred to ambient temperature. Recommended: [AmbientTemp. + OverTemp.] ≤70°C (158°F)

Specifications are subject to change without prior notice

UC/FM/LB4-20/F

FM DIRECTIONAL FILTER TYPE COMBINER

MECHANICAL LAYOUT

UC/FM/LB4-20/B/F

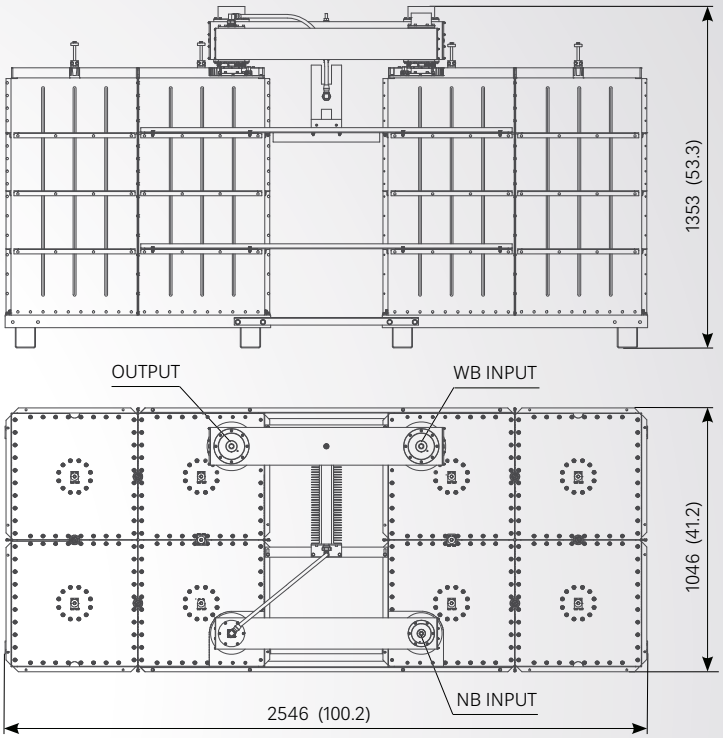

UC/FM/LB4-20/C/F

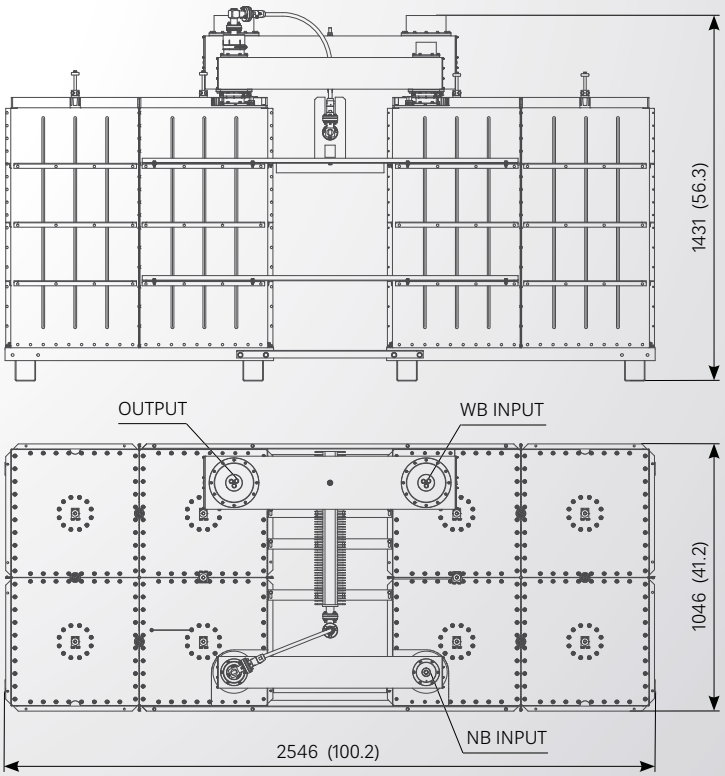

All dimensions are in millimeters (inches)

UC/FM/LB2-40

FM DIRECTIONAL FILTER TYPE COMBINER

FEATURES

- FM double bridge channel combiner
- 2 pole / 750 mm (29.5 in)
- adjustable selectivity
- temperature compensated

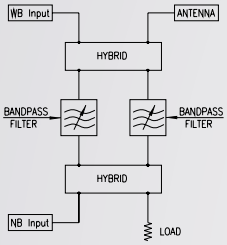

ELECTRICAL AND MECHANICAL DATA

COMBINER TYPE	UC/FM/LB2-40	
FREQUENCY RANGE		
- wideband input	87.5 ÷ 108 MHz	
- narrowband input	Tunable over entire FM range	
INPUTS AND OUTPUT IMPEDANCE	50 ohm	
RETURN LOSS		
- wideband input	≥ 26 dB	
- narrowband input (at carrier fo)	≥ 32 dB	
INSERTION LOSS (at carrier fo)		
NB input with freq. spacing ±2.0 MHz	≤ 0.14 dB	
NB input with freq. spacing ±1.6 MHz	≤ 0.16 dB	
WB input	≤ 0.10 dB	
ISOLATION (at carrier fo)		
- Narrowband input to wideband input	≥ 35 dB (typical)	
- Wideband input to narrowband input	≥ 50 dB	
GROUP DELAY	≤ 25 ns at fo ±100 kHz	
(With 1.6 MHz frequency spacing)	≤ 50 ns at fo ±150 kHz	
MAX POWER RATINGS / freq. spacing (MHz)	±2.0	±1.6
- Narrowband input	50 kW	40 kW
- Wideband input **	160 kW	160 kW
- Total output **	160 kW	160 kW
OPERATING TEMPERATURE RANGE	-10 to + 45°C (+14 to +113°F)	
OVER TEMPERATURE*	typical 30 K at max NB input power	
INPUT PORTS		
- Narrowband input ***	3-1/8" Unfl.	
- Wideband input	6-1/8" Unfl.	
OUTPUT PORT	6-1/8" Unfl.	
WEIGHT (approx)	450 kg (992 lb)	

* referred to ambient temperature. Recommended: [AmbientTemp. + OverTemp.] ≤70°C (158°F)
** increased power on request
*** other connectors on request

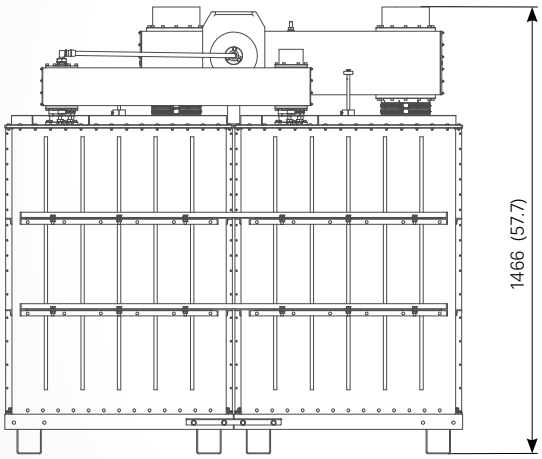

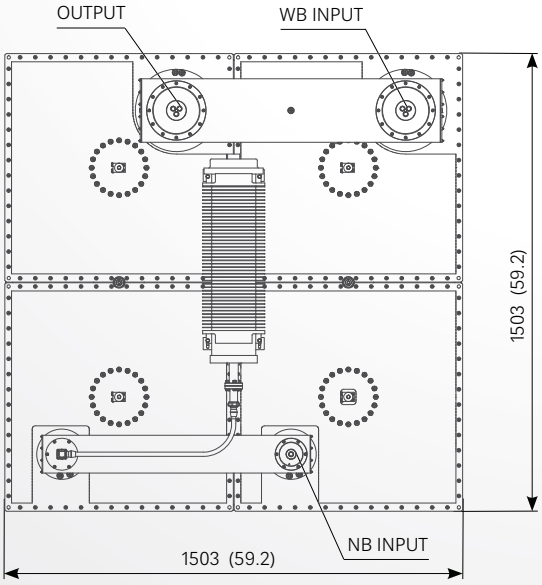

All dimensions are in millimeters (inches)

Specifications are subject to change without prior notice

UC/FM/LB3-40

FM DIRECTIONAL FILTER TYPE COMBINER

FEATURES

- FM double bridge channel combiner
- 3 pole / 750 mm (29.5 in)
- adjustable selectivity
- temperature compensated

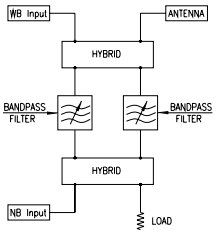

ELECTRICAL AND MECHANICAL DATA

COMBINER TYPE	UC/FM/LB3-40		
FREQUENCY RANGE			
- wideband input	87.5 ÷ 108 MHz		
- narrowband input	Tunable over entire FM range		
INPUTS AND OUTPUT IMPEDANCE	50 ohm		
RETURN LOSS			
- wideband input	≥ 26 dB		
- narrowband input (at carrier fo)	≥ 32 dB		
INSERTION LOSS (at carrier fo)			
NB input with freq. spacing ±1.6 MHz	≤ 0.14 dB		
NB input with freq. spacing ±1.2 MHz	≤ 0.17 dB		
NB input with freq. spacing ±0.8 MHz	≤ 0.22 dB		
WB input	≤ 0.10 dB		
WB input with freq. spacing ±0.8 MHz	≤ 0.15 dB		
ISOLATION (at carrier fo)			
- Narrowband input to wideband input	≥ 35 dB (typical)		
- Wideband input to narrowband input	≥ 50 dB		
GROUP DELAY	≤ 40 ns at fo ±100 kHz		
(With 0.8 MHz frequency spacing)	≤ 80 ns at fo ±150 kHz		
MAX POWER RATINGS / freq. spacing (MHz)	±1.6	±1.2	±0.8
- Narrowband input **	50 kW	50 kW	40 kW
- Wideband input **	160 kW	160 kW	160 kW
- Total output **	160 kW	160 kW	160 kW
OPERATING TEMPERATURE RANGE	-10 to + 45°C (+14 to +113°F)		
OVER TEMPERATURE*	typical 30 K at max NB input power		
INPUT PORTS			
- Narrowband input ***	3-1/8" Unfl.		
- Wideband input	6-1/8" Unfl.		
OUTPUT PORT	6-1/8" Unfl.		
WEIGHT (approx)	570 kg (1257 lb)		

* referred to ambient temperature. Recommended: [AmbientTemp. + OverTemp.] ≤70°C (158°F)
** increased power on request
*** other connectors on request

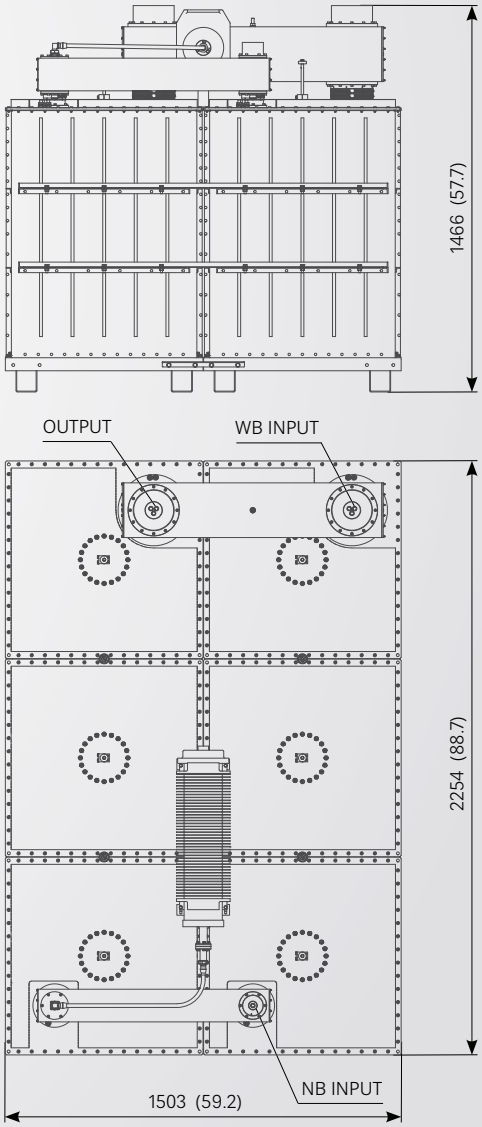

All dimensions are in millimeters (inches)

UC/FM/LB4-40

FM DIRECTIONAL FILTER TYPE COMBINER

FEATURES

- FM double bridge channel combiner
- 4 pole / 750 mm (29.5 in)
- adjustable selectivity
- temperature compensated

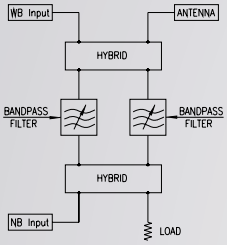

ELECTRICAL AND MECHANICAL DATA

COMBINER TYPE	UC/FM/LB4-40		
FREQUENCY RANGE			
- wideband input	87.5 ÷ 108 MHz		
- narrowband input	Tunable over entire FM range		
INPUTS AND OUTPUT IMPEDANCE	50 ohm		
RETURN LOSS			
- wideband input	≥ 26 dB		
- narrowband input (at carrier fo)	≥ 32 dB		
INSERTION LOSS (at carrier fo)			
NB input with freq. spacing ±1.0 MHz	≤ 0.26 dB		
NB input with freq. spacing ±0.8 MHz	≤ 0.30 dB		
NB input with freq. spacing ±0.6 MHz	≤ 0.36 dB		
WB input	≤ 0.10 dB		
WB input with freq. spacing ±0.6 MHz	≤ 0.15 dB		
ISOLATION (at carrier fo)			
- Narrowband input to wideband input	≥ 35 dB (typical)		
- Wideband input to narrowband input	≥ 50 dB		
GROUP DELAY	≤ 40 ns at fo ±100 kHz		
(With 0.8 MHz frequency spacing)	≤ 80 ns at fo ±150 kHz		
MAX POWER RATINGS / freq. spacing (MHz)	±1.0	±0.8	±0.6
- Narrowband input **	50 kW	48 kW	40 kW
- Wideband input **	160 kW	160 kW	160 kW
- Total output **	160 kW	160 kW	160 kW
OPERATING TEMPERATURE RANGE	-10 to + 45°C (+14 to +113°F)		
OVER TEMPERATURE*	typical 30 K at max NB input power		
INPUT PORTS			
- Narrowband input ***	3-1/8" Unfl.		
- Wideband input	6-1/8" Unfl.		
OUTPUT PORT	6-1/8" Unfl.		
WEIGHT (approx)	800 kg (1764 lb)		

* referred to ambient temperature. Recommended: [AmbientTemp. + OverTemp.] ≤70°C (158°F)
** increased power on request
*** other connectors on request

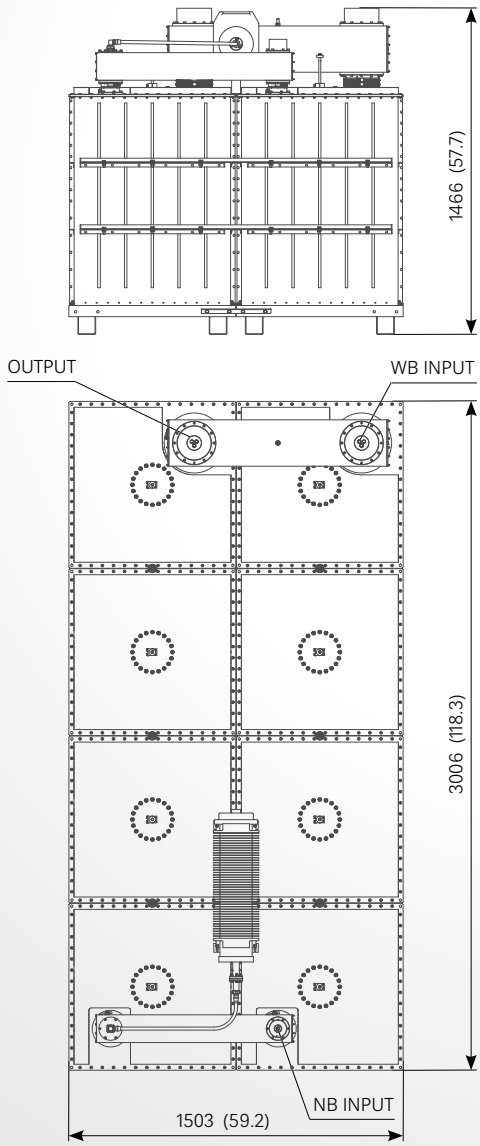

All dimensions are in millimeters (inches)

Specifications are subject to change without prior notice

by KATHREIN SIRA RADIO SYSTEMS

SIRA WORLDWIDE

SIRA antenna systems are currently installed in more than 120 countries, making the company one of the world leaders in the Broadcasting Industry.

There are active SIRA antennas and combiners in:

AFGHANISTAN
ALBANIA
ALGERIA
ARGENTINA
ARUBA
AUSTRALIA
AUSTRIA
BANGLADESH
BENIN
BOSNIA AND HERZEGOVINA
BOTSWANA
BRAZIL
BULGARIA
BURKINA FASO
CAMBODIA
CANADA
CAPE VERDE
CHAD
CHILE
CHINA
COLOMBIA
CONGO
COSTA RICA
COTE D'IVOIRE
CROATIA
CUBA
CYPRUS
CZECH REPUBLIC
DJIBOUTI
DOMINICAN REPUBLIC
ECUADOR
EL SALVADOR
ESTONIA
ETHIOPIA
FALKLANDS
FIJI
FINLAND
FRANCE
FRENCH POLYNESIA
GABON
GEORGIA
GERMANY
GHANA
GREECE
GREENLAND
GUADALUPE
GUATEMALA
GUYANA
HAITI
HONDURAS
HUNGARY
INDIA
INDONESIA
IRAN
IRAQ
IRELAND
ISRAEL
ITALY
JORDAN
KAZAKHSTAN
KENYA
KOREA (DPRK)
KUWAIT
LATVIA
LEBANON
LIBYA
LITHUANIA
LUXEMBOURG
MADAGASCAR
MALAYSIA
MALDIVES
MALI
MALTA
MARQUIS ISLANDS
MARTNIQUE
MAURITANIA
MAYOTTE
MEXICO
MOLDOVA
MONACO
MONTENEGRO
MOROCCO
MOZAMBIQUE
MYANMAR
NEPAL
NETHERLANDS
NEW CALEDONIA
NEW ZEALAND
NICARAGUA
NORWAY
PAKISTAN
PANAMA
PARAGUAY
PERU
PHILIPPINES
POLAND
PORTUGAL
QATAR
REPUBLIC OF KOREA
REUNION
ROMANIA
RUSSIA
RWANDA
SAUDI ARABIA
SENEGAL
SERBIA
SINGAPORE
SLOVAKIA
SLOVENIA
SOUTH AFRICA
SPAIN
SRI LANKA
ST. PIERRE & MIQUELON
SUDAN
SURINAME
SWEDEN
SWITZERLAND
SYRIA
TAIWAN
TANZANIA
THAILAND
TOGO
TUNISIA
TURKEY
UGANDA
UKRAINE
UNITED ARAB EMIRATES
UNITED KINGDOM
UNITED STATES OF AMERICA
URUGUAY
VATICAN CITY
VENEZUELA
VIETNAM
WALLIS & FUTUNA
ZAMBIA
ZIMBABWE

by KATHREIN

SIRA

RADIO SYSTEMS

ANYWHERE THE SOLUTION

KATHREIN Broadcast GmbH
Ing.-Anton-Kathrein-Str. 1–7
83101 Rohrdorf, Germany
www.kathrein-bca.com
www.siraradiosystems.com